FOR PUBLIC RELEASE

High School Registered Apprenticeship Playbook

Brought to you by
Career Academy of Pella and Vermeer Corporation

June 2018

Table of Contents

Table of Contents ..... Page 2

Contacts ..... Page 3

Explaining Employment Needs and the Registered Apprenticeship Solution ..... Page 4
A powerpoint template to promote the concept to area businesses and school systems

The Business Process ..... Page 22
A guide for employers of registered apprentices

Business-conducted Mentor and Manager Training ..... Page 52
A powerpoint template to review with new apprentice mentors and managers

Career Academy-conducted Mentor and Manager Training..... Page 74
A powerpoint template to review with new apprentice mentors and managers

Department of Labor Registered Apprenticeship in Welding Contract.....Page 86
The official participant agreement

Career Academy of Pella Registered Apprenticeship Brochure ..... Page 127
A marketing tool for students, parents, schools and employers

Acknowedgements .....Page 130

Contacts

PLAYBOOK DEVELOPMENT

Eric C. Nelson
Principal
Pella High School
212 East University, Pella, IA 50219
Office: (641) 628-3870
eric.nelson@pella.k12.ia.us

Lowell Ernst
Director of K-12 Instruction
Pella Community School District
Office: (641) 628-2220 Cell: (641) 780-8753
lowell.ernst@pella.k12.ia.us

Sheila Graham
Welding Instructor
Career Academy of Pella
410 East 8th Street, Pella, IA 50219
Office: (641) 628-3731
sheila.graham@pella.k12.ia.us

Teri Vos
Outreach Manager/Apprenticeship Program Coordinator
Vermeer Corporation
1210 Vermeer Road East, Pella, IA 50219
Office: (641) 621-7908 Cell: (641) 629-1899
terivos@vermeer.com

Dave Landon
Manager of Welding Engineering
Vermeer Corporation
1210 Vermeer Road East, Pella, IA 50219
Office: (641) 621-7476 Cell: (641) 780-5957
dlandon@vermeer.com

REGISTERED APPRENTICESHIP OVERSIGHT

Greer Sisson
State Director
U.S. Department of Labor/Office of Apprenticeship
210 Walnut Room 715, Des Moines, IA 50309
Office: (515) 284-4690
sisson.greer@dol.gov

Richard Madden
Apprenticeship and Training Representative
U.S. Department of Labor/Office of Apprenticeship
210 Walnut Room 715, Des Moines, IA 50309
Office: (515) 284-4690
madden.richard@dol.gov

PLAYBOOK COMMUNITY COLLEGE PARTNER

Galen Briggs
Continuing Education Coordinator for Apprenticeships
DMACC Center for Career & Professional Development
at Southridge
1111 E. Army Post Road, Suite 2004, Des Moines, IA 50315
Office: (515) 256-4905
gpbriggs@gmacc.edu

Scott Ocken
Vice President for Academic Affairs
Des Moines Area Community College
2006 S. Ankeny Boulevard, Ankeny, IA 50023
Office: (515) 964-6364 Cell: (515) 490-1519
sjocken@dmacc.edu

STATE OF IOWA

Amy Beller
Registered Apprenticeship Program Coordinator
Iowa Workforce Development
1000 East Grand Avenue, Des Moines, IA 50309
Office: (515) 725-1035 Cell: (515) 805-7321
amy.beller@iwd.iowa.gov

Pradeep Kotamraju
Career and Technical Education (CTE) Bureau Chief
Division of Community Colleges and Workforce Preparation
Iowa Department of Education
Grimes State Office Building
400 East 14th Street, Des Moines, IA 50319
Office: (515) 281-4716 Cell: (515) 314-7852
pradeep.kotamraju@iowa.gov

Jill Lippincott
Project Manager
Iowa Economic Development Authority
200 East Grand Avenue, Des Moines, IA 50309
Office: (515) 348-6159
jill.lippincott@iowaeda.com

Explaining Employment Needs and the Registered Apprenticeship Solution

A powerpoint template to promote the concept to Iowa businesses and high schools

Meeting Employment Needs in Iowa

The Registered Apprenticeship Model

The Problem

- Over next decade, 3.5 million U.S. manufacturing jobs need to be filled
- Skills gap expected to result in 2 million of those jobs going unfilled
- 82% - skills gap will impact ability to meet customer demand
- 78% - skills gap will impact ability to implement new technology
- 90% - moderate to severe shortage of skilled production employees

Source: "*The skills gap in US manufacturing 2015 and beyond*", Deloitte and Manufacturing Institute

The Solution

Find better ways to prepare the workforce to fill skilled jobs.

The Partners

- Regional Apprenticeship Sponsor (Career Academy of Pella)
- Vermeer Corporation and other participating employers
- Participating School Districts
- Des Moines Area Community College
- AEA Online
- U.S. Department of Labor
- Iowa Department of Education
- Iowa Workforce Development
- Iowa Governor's STEM Advisory Council

In alignment with the Future Ready Iowa Initiative

The Plan - High School Registered Apprenticeships

Model:

- Identify skills necessary to be successful in specific careers
- Develop a pathway that ensures the development of those skills
  - Academic competencies
  - Job site competencies
- Market the pathway to students

The Picture

- Freshman and sophomore - Core and elective courses
- Junior - Core and apprentice training courses
- Summer - Initial employment/training
- Senior - 1/2 classroom (core and elective) and 1/2 employment
- Post-graduation - One year of employment

Career Academy of Pella Apprenticeship Details

*Indicates college credit course

9th Grade (A minimum of 7 classes required per semester)		
	Semester 1	Semester 2
Required Core Academic Skill Courses	Core Math 1 or Math 1 English 9 or English 9 Honors Physical Science American History or *American History AP**	Core Math 1 or Math 1 English 9 or English 9 Honors Physical Science American History or *American History AP**
Required Electives	PE	
Required Electives for Apprenticeships		
Suggested Electives	Exploring Industrial Technology Spanish 1 Robotics 1	Fundamentals of Construction Spanish 1

10th Grade (A minimum of 7 classes required per semester)		
	Semester 1	Semester 2
Required Core Academic Skill Courses	Core Math 2 or Math 2 English 10 or English 10 Honors Chemistry World Geography or *Human Geography AP**	Core Math 2 or Math 2 English 10 or English 10 Honors Chemistry World Geography or *Human Geography AP**
Required Electives	PE	
Required Electives for Apprenticeships	Metal Design & Marketing	Health/CPR
Suggested Electives	Spanish 2 Robotics 2	Spanish 2 Fundamentals of Welding

11th Grade (A minimum of 6 classes required per semester)		
	Semester 1	Semester 2
Required Core Academic Skill Courses	Core Math 3 or Math 3 English 11 or *College American Literature to 1865** Biology World History or *Western Civilizations 1**	Core Math 3 or Math 3 English 11 or *College American Literature since 1865** Biology World History or *Western Civilizations 2**
Required Electives	PE	
Required Electives for Apprenticeships	*Welding 1* - (2 High School Credits)*	*Welding 2* - (2 High School Credits)* *Care of/Use of Hand/Power Tools**
Suggested Electives	Psychology Introduction to Engineering & Design	*Introduction to Psychology** Introduction to Engineering & Design

12th Grade (A minimum of 6 classes required per semester)		
	Semester 1	Semester 2
Required Core Academic Skill Courses	*Communication Skills**	American Government *or American Government AP**
Required Electives	PE	
Required Electives for Apprenticeships		Financial Literacy
Suggested Electives	Business Principles & Ownership *Statistics**	*Oral Communication**
Workplace Training	*Metal Work-Workplace Experience** *(3 High School Credits)*	*Metal Work-Workplace Experience** *(3 High School Credits)*

Workplace Requirements				
	Summer	Semester 1	Semester 2	Post Secondary
Following 11th Grade	Full time employee for approximately 8 weeks of 40 hours per week on the worksite for approximately 320 hours			
DMACC Course and Credits	MFG 818 - 5 Credits			
12th Grade		Part time employee approximately 20 hours per week on the worksite for approximately 360 hours	Part time employee approximately 20 hours per week on the worksite for approximately 360 hours	
DMACC Course and Credits		SDV 221/226 - 6 Credits	SDV 221/225 - 5 Credits	
Post Secondary				Full time employee for approximately one year
DMACC Course and Credits				SDV 212/223 - 3 Credits MFG 510 - 3 Credits WEL 341- 6 Credits WEI 342- 6 Credits

DMACC Associate of General Studies Degree

# of Credits	Course
	Welding 1 and Welding 2
6	Welding 1 (Electives) ** Welding 1 = 6 DMACC Credits (WEL 228 - 1 Credit, WEL 233 - 3 Credits, WEL 244 - 2 Credits)*
8	Welding 2 (Electives)**8 DMACC Credits (WEL 245 - 2 Credits, WEL 208 - 2 Credits, WEL 236 - 2 Credits, WEL 238 - 2 Credits)*
14	Total Welding 1 & 2 Credits
	Completion of Apprenticeship (Electives)
5	MFG 818 - 5 Credits (Summer between junior and senior years)
6	SDV 212/226 - 6 Credits (Fall senior year) SDV 212 - 1 Credit, SDV 225 - 5 Credits
5	SDV 212/225 - 5 Credits (Spring senior year) SDV 212 - 1 Credit, SDV 225 - 4 Credits
18	SDV 212 - 1 Credit, SDV 223 - 2 Credits, MFG 510 - 3 Credits, WEL 341 - 6 Credits, WEL 342 - 6 Credits (Post Graduation)
34	Total On-The-Job Credits

DMACC Associate of General Studies Degree

# of Credits	Pella High School Course
1	Power Tools (Electives)
3	Communication Skills (Communications)
3	Intro to Psychology (Social and Behavioral Sciences/Humanities)
4	Statistics or DMACC online course (Math/Science)
3	Distributed Requirement (IED, Oral Communication, Elementary Spanish 1)
Minimum 2	2 Elective Credits
Minimum 16	Total DMACC Credits through Pella HIgh School
64 Credits	DMACC AGS Credits Needed

The Product

- High School Diploma
- National Career Readiness Certification
- American Welding Society Certification
- Apprenticeship Certificate
- Associate of General Studies Degree (optional)
- Career Readiness / Employment

Program Opportunities

Areas being pursued:

- Welding (2018-19 school year)
- Engineering Technician (2019-20 school year)
- Certified Nursing Assistant (2019-20 school year)
- Culinary Arts (2019-20 school year)

The Future

Increase...

- available labor force
- opportunities for business to thrive and expand
- opportunities for people to live and work in Iowa
- economic development

The Business Process

A guide for employers of registered apprentices

Career Academy of Pella High School Registered Apprenticeship Program

The Business Process

5/25/18

Table of Contents

Page	Section
2	Business Participation Timeline
3	Career Academy of Pella Interview
4	Business Interview Details
5	Job Shadow Guide
6	Student Registration Process
7	Offer Letter Template
8	Onboarding and Summer Phase of Apprenticeship
9	Senior Year Phase of Apprenticeship
10	Post High School Phase of Apprenticeship
11-17	Apprenticeship Standards Documentation
18	Awarding Registered Apprenticeship Status
19	Appendix A - Apprentice Registration
20-24	Appendix B - Job Shadowing Manual
25-26	Appendix C - Glossary of Terms

Business Participation Timeline

(Starting in the student's junior year)

Month	Step	Duration
December / January	Interview conducted by Career Academy of Pella staff to verify interest and identify potential placements	1 hour per student
February	Business interview day(s) where students will rotate through interviews with businesses who are potential apprenticeship placements	1-2 days during welding class periods
March	Conduct a job shadow with student(s) at his or her most likely business placement	4 hours
April	Official student registration for apprenticeship with signing ceremony	1 hour
May	Pre-employment screening and offer letter from business	2 weeks
June-July	Onboarding, employment and mentoring in the summer phase of the apprenticeship	8 weeks
Late August-May of Senior year	Four hours per day of employment and mentoring in the school-year phase of the apprenticeship	36 weeks
June to approximately May following graduation	Full time employment and mentoring during the after high school phase of the apprenticeship	Approximately 1 year
After completion of competencies	Business submits completion of technical competencies to CAP Submission of all materials to department of labor by CAP Awarding of certified apprentice status by the Department of Labor	1 month

Career Academy of Pella Interview

Step 1 - Students will affirm an interest pursuing an apprenticeship.

Step 2 - The instructor will build a schedule for interviews with him or herself and the high school principal or designee.

Step 3 - Responses from the interview will be documented by the CAP representative.

Step 4 - Students are matched with possible employer(s) based upon the answers to the questions asked during the interview and previous experience with the student. This match will be the decision of the officials of the CAP.

Step 5 - CAP staff will make arrangements for the business interview based upon the results of this interview.

Business Interview

Step 1 - CAP sets the interview dates prior to the start of the school year and informs potential business partners.

Step 2 - CAP will determine the location and schedule for the interviews based upon the number of candidates and business partners available. Business partners will be responsible for the structure of their own interviews but should be aware of a total time slot of 30 minutes for each candidate.

Step 3 - The CAP administrative assistant will communicate with all business partners on the logistics for the day at least two weeks in advance of the interview day(s).

Step 4 - CAP will prepare students for interviews with previous training and information on appropriate dress.

Step 5 - Each business will have a private location for the interview and should conduct the interview with at least two people in the room. Students will answer questions and rotate through potential employers every 30 minutes. Interviews will only be conducted with businesses who have been identified as potential placements during the CAP interview.

Step 6 - Following the interviews, each employer should indicate who they would find acceptable as an apprentice. Interviewers who rate any student as “not acceptable” will provide guidance for the student to improve their interview skills for future opportunities. Each student will be rated on the 3-point scale: 1) Not acceptable 2) Acceptable 3) Preferred.

Step 7 - Representatives from CAP will meet individually with apprenticeship candidates to discuss placement options. All placements will be based on company requests and student preferences but placement decisions will be made by CAP staff to assure a balance between business partners.

Step 8 - CAP staff will notify apprentice candidates, parents and employers of placement decisions and specific timeline dates moving forward.

Job Shadow

Step 1 - CAP administrative assistant contacts business partners who have indicated an interest in a specific apprentice candidate to set up a date for a three- to four-hour shadow opportunity. This contact should clarify the following details:

- Time and date for the job shadow
- Contact information of the job shadow leader
- Appropriate attire and safety equipment for the day. (All Personal Protective Equipment will need to be provided by the business partner.)
- Clarify responsibilities of student, parent(s), business partner, and career academy (see appendix B)
- Agenda for the day (see example in appendix B).

Step 2 - Obtain parent permission and complete student agreement (see appendix B).

Step 3 - Business partners determine safety guidelines for the experience and clearly communicate them to student and the job shadow leader in advance of the event.

Step 4 - Student is instructed by the career academy on the purpose of the experience and the expectations for applications into his or her current course work (see student question sheet in appendix B).

Step 5 - Shadow leader will be trained by business partner to assure a positive, productive student experience.

Step 6 - Student should report to the facility with the contact information at least 10 minutes in advance of the appointment time.

Step 7 - Job shadow leader and apprenticeship candidate will conduct the job shadowing experience. All notes taken by the student should be kept in a form that can be used for the final report.

Step 8 - A thank you note should be sent to the job shadow leader within 48 hours of the conclusion of the experience.

Step 9 - Student will complete the job shadowing report and turn it in to the instructor.

Student Registration for Apprenticeship

Step 1: Students reaffirm their interest following job shadow opportunity.

Step 2: Parent(s)/Guardian is/are contacted by instructor to confirm approval.

Step 3: Program Registration and Apprenticeship Agreement form (Appendix A) is distributed to students and parent(s)/guardian.

Step 4: Signing day is scheduled with student, parent, Career Academy of Pella instructor, and apprentice employer.

Step 5: The press is contacted by the career academy once the day is secured.

At signing ceremony:

Step 6: Student and parent/guardian completes Part A of application located on page 29 of the standards document.

Step 7: Career Academy of Pella completes Part B.

Step 8: Press takes pictures for publication.

Step 9: Copies of the agreement are made and given to student, employer, and CAP.

Step 10: Original document is sent to Career Academy of Pella.

Step 11: Document is uploaded into the RAPIDS system for official storage with the Department of Labor.

[Letterhead]

[Date]

[Name]
[Address]
[Address]

Subject: Apprentice Opportunity

Dear [Student Name],

We are glad you have chosen to participate in the [School and Program Discipline] Apprentice Program and are excited to provide you with an offer of employment at [Company Name]. We invite you to join us as a [Position Title] Apprentice reporting to [Supervisor Name]. Your mentor will be [Mentor Name]. As we support your competency requirements for the [Program Name] Apprentice Program, we believe your skills and talents will be valuable within our organization throughout the program period and beyond. Below you will find additional details regarding this opportunity.

Apprentice Step	Summer	Senior Year (Part-time)	Post High School
Start Date	June 4, 2018	To Be Determined	To Be Determined
Weekly Schedule	To Be Determined Averaging 40 hours	To Be Determined Averaging 20 hours	To Be Determined Averaging 40 hours
Compensation	Hourly Rate of $12.00	Hourly Rate of $12.00	Hourly Rate of $15.00
Pay Period	Paid on a (X) basis	Paid on a (X) basis	Paid on a (X) basis

As a [optional: full-time, part-time, apprentice] team member of [Company Name], you are eligible to receive the following benefits and perks: [list benefits and/or perks]. This offer is not to be considered a contract and rather an at-will relationship which at any time your employment may be terminated with or without cause by either party. Additionally, your employment may be extended upon successful completion of the apprentice program. This offer is conditional upon acceptable results of employment requirements to include a [optional: drug screen, employment background check, physical evaluation, and employment eligibility and verification]. By signing the below and returning it to [Contact Name] at [Email Address] by [Deadline Date], you accept this offer. Thereafter, instructions to complete the employment requirements and additional information pertaining to your first day and orientation will be provided to you.

[Student Name], we are confident the training you've received through the [School Name] has prepared you well for this exciting experience ahead and for your success through the completion of the [Program Discipline] Apprentice Program. We greatly look forward to having you join our team!

Sincerely,

[Contact Name]
[Title]
[Phone Number]

Acceptance of Offer:

_____ _____
Student Signature Date

Summer Phase of Apprenticeship

Outline:

- Approximately 40 hours per week for minimum of 8 weeks (approximately 320 hours)
- Assigned to a full time mentor
- Work to fulfill competencies (see appendix C)

Student Requirements:

- Spend approximately 40 hours per week on the work site
- Complete specific competencies with the supervisor at the work site
- Meet all employment requirements at apprenticeship placement

Career Academy of Pella Requirements:

- Maintain student competency records
- Maintain a communication link between CAP and the apprenticeship supervisor

Business Requirements:

- Establish work schedule
- Communicate onboarding process in advance
- Maintain an assigned workplace mentor/supervisor
- Meet minimum payment requirements
- Track the training, demonstration, proficiency, and completion of workplace competencies
- Submit reports to CAP administrative assistant documenting competency completion
- Communicate with CAP about concerns that need attention

Senior Year Phase of Apprenticeship

Outline:

- Approximately 20 hours per week on the job
- Assigned to a full time mentor/supervisor
- Maintains status as a full time student

Student Requirements:

- Enrollment in at least three courses to be a full time student
- Spend four hours per day on the work site
- Complete specific competencies with the supervisor at the work site
- Meet all employment requirements at apprenticeship placement
- Maintain passing grades in all courses
- Meet classroom attendance requirements

Career Academy of Pella Requirements:

- Maintain student competency records
- Maintain a communication link between CAP and the apprenticeship supervisor
- Track student progress in related academic courses

Business Requirements:

- Establish work schedule
- Maintain an assigned workplace mentor/supervisor
- Meet minimum payment requirements
- Track the training, demonstration, proficiency, and completion of workplace competencies
- Submit reports to CAP administrative assistant documenting competency completion
- Communicate with CAP about concerns that need attention

Post High School Phase of Apprenticeship

Outline:

- Full-time employment as assigned by the employer
- Assigned to a full time mentor/supervisor
- Term of approximately one year

Student Requirements:

- Full-time employment as assigned by the employer
- Complete specific competencies with the supervisor at the work site
- Meet all employment requirements at apprenticeship placement

Career Academy of Pella Requirements:

- Maintain student competency records
- Maintain a communication link between CAP and the apprenticeship supervisor

Business Requirements:

- Establish work schedule
- Maintain an assigned workplace mentor/supervisor
- Meet minimum payment requirements
- Track the training, demonstration, proficiency, and completion of workplace competencies
- Submit reports to CAP administrative assistant documenting competency completion
- Communicate with CAP about concerns that need attention

Apprenticeship Standards Documentation
*** Completed In Welding 1 & Welding 2 Class at the Career Academy of Pella***

WELDING SKILLS – (MUST BE DONE IN PELLA – ADVANCED WELDING*)
First Semester Competencies (List)
Safety and Related Instruction
Gas and Metal Arc Welding
Blueprint Reading for Welders and Fitters
Second Semester Competencies (List)
Gas Metal Arc Welding – GMAW (Spray Transfer)
Shielded Metal Arc Welding
Flux Cored Arc Welding
Introduction to Fabrication
Pass AWS Certification at the completion of the Welding 1 & 2 classes

Related Training and Instruction

SAFETY AND RELATED INSTRUCTION 39 HOURS
Safety Procedures and Practices
Job Safety Analysis Tests
Safety Videos ● ***Electric Shock*** ● ***Fumes and Gases*** ● ***Fire and Explosions*** ● ***MSDS - Material Safety Data Sheets*** ● ***PPE - Personal Protective Equipment*** ● ***Cutting Safety***
Utilize all Welding Safety in All Classes

GAS METAL ARC WELDING – GMAW (SHORT CIRCUIT) 60 HOURS
Introduction to Gas Metal Arc Welding
Safety and Health of Welders and Implement in class
Installation, Setup and Maintenance of Equipment
Seven Essentials of Welding
Quality of Welds - Discontinuities
Shielding Gases
Distortion Control
Surfacing Welds - Flat Position
Fillet Weld - T-joint & Lap - Horizontal Position (2F)
Fillet Weld - T-joint Vertical Up (3F)
Fillet Weld - T-joint Overhead (4F)
Triple Pass Weld - Horizontal Position (2F)
Square Groove Weld - Flat Position (1G)
Square Groove Weld - Horizontal (2G)
Square Groove Weld - Vertical (3G)
Square Groove Weld - Overhead (4G)
Single V-Groove Weld - Flat position (1G)
Fillet Weld Around 1" to 2" Circle
Macro Etch Test
Weld Parts to Blueprint

GAS METAL ARC WELDING - GMAW (SPRAY TRANSFER) 20 HOURS
Introduction to Gas Metal Arc Welding

Safety and Health of Welders and Implement in class
Installation, Setup and Maintenance of Equipment
Quality of Welds - Discontinuities
Shielding Gases
Surfacing Welds - Flat Position
Fillet Weld - T-joint & Lap - Horizontal Position (2F)
Fillet Weld - T-joint Vertical (3F)
Fillet Weld - T-joint Overhead (4F)
Triple Pass Weld - All Positions
Square Groove Weld - Flat Position (1G)
Square Groove Weld - Horizontal (2G)
Square Groove Weld - Vertical (3G)
Square Groove Weld - Overhead (4G)
Single V-Groove Weld - Flat position (1G)
Fillet Weld Around 1" to 2" Circle
Macro Etch Test
Practice Session for AWS V Groove Certification 1G-L or UL
Weld Parts to Blueprint

SHIELDED METAL ARC WELDING - SMAW 20 HOURS
Introduction to Shielded Metal Arc Welding
Safety and Health of Welders and Implement in class
Installation, Setup and Maintenance of Equipment
The Five Essentials

Striking and Controlling the Arc
Power Sources
Quality of Welds - Discontinuities
Electrode Selection
Surfacing Welds - Flat Position (E6010 and E7018)
Fillet Weld - T-joint & Lap - Horizontal Position (2F)
Fillet Weld - T-joint Vertical (3F)
Fillet Weld - T-joint Overhead (4F)
Triple Pass Weld - All Positions
Square Groove Weld - Flat Position (1G)

FLUX CORED ARC WELDING - FCAW 20 HOURS
Introduction to Flux Cored Arc Welding
Safety and Health of Welders and Implement in class
Installation, Setup and Maintenance of Equipment
The Five Essentials
Quality of Welds - Discontinuities
Fillet Weld - T-joint Horizontal Position (2F)
Fillet Weld - T-joint Vertical Position (3F)
Fillet Weld - T-joint Overhead Position (4F)
Triple Pass Weld - Horizontal Position (2F)
Square Groove Weld - Flat Position (1G)

BLUEPRINT READING FOR WELDERS AND FITTERS 45 HOURS
Welding Symbols
Review of Mathematics : Fraction/Decimals/Conversions
Metrics and Conversions
Orthographic Views
Standard Drawing Lines and Symbols
Interpreting Blueprint Information
Surface and Center Line Relationships
Auxiliary Views
Scale Drawings
Dimensional Tolerance and Stock Allowance
Setup Tools
Setup Applications
Blueprint Magnet Tests

INTRO TO FABRICATION 60 HOURS
Teach safe use and how to operate all listed below ● ***Bandsaw*** ● ***Plasma Cutter*** ● ***Oxy-Acetylene Cutting and Heating*** ● ***Iron Worker*** ● ***Drill Press*** ● ***Punch Press*** ● ***Grinder***
Review and discuss ASTM
Measuring Tools ● ***Calipers*** ● ***Micrometer*** ● ***Tape Measure***

Basic Lay-out ● ***Combination Square and Scribe*** ● ***Angle Protractor*** ● ***Produce Weldment from Blueprint***
Layout Parts in a Fixture

** Completed In On-The-Job Training

		Place a check mark in the box when complete.			
	Gas Metal Arc Welding – 0.035" diameter electrode	***Field Training***	***Demonstrates Fundamentals***	***Proficient in Task***	***Completion Date***
1	***Weld a 3/16" (0.2") [5 mm] horizontal fillet weld in T joint in the horizontal position in a straight line***				
2	***Weld a 5/16" (0.3") [8 mm] horizontal fillet weld in Lap joint in the horizontal position in a straight line***				
3	***Weld square groove butt joint in the flat position***				
4	***Weld flare bevel groove T joint in the flat and horizontal positions***				
5	***Weld a 3/16" (0.2") [5 mm] horizontal fillet weld in T joint in the horizontal position around a small diameter pipe***				
6	***Weld a 5/16" (0.3") [8 mm] horizontal fillet weld in T joint in the horizontal position around a small diameter pipe***				

	Gas Metal Arc Welding – 0.045” diameter electrode	Field Training	Demonstrates Fundamentals	Proficient in Task	Completion Date
7	Weld a 5/16” (0.3”) [8 mm] horizontal fillet weld in T joint in the horizontal position in a straight line				
8	Weld a 3/8” (0.4”) [10 mm] horizontal fillet weld in T joint in the horizontal position in a straight line (2 pass)				
9	Weld a 1/2” (0.5”) [13 mm] horizontal fillet weld in T joint in the horizontal position in a straight line (3 pass)				
10	Weld a 5/16” (0.3”) [8 mm] horizontal fillet weld in T joint in the horizontal position around a small diameter pipe				
11	Weld bevel (single, Vee, flair) groove welds in the flat position				
	Hoist and Rigging	Field Training	Demonstrates Fundamentals	Proficient in Task	Completion Date
12	Safety procedures				
13	Use of straps, cables, chains				
14	Use of lifting devices				
15	Estimation of load weights and center of gravity				
16	Moving, loading, and manipulation of loads				
	Jigs and Fixtures	Field Training	Demonstrates Fundamentals	Proficient in Task	Completion Date
17	Verify shape of metal parts according to blueprints				

18	***Assemble metal parts in jigs and fixtures***				
19	***Tack parts together***				
	Safety	***Field Training***	***Demonstrates Fundamentals***	***Proficient in Task***	***Completion Date***
20	***Safety procedures and practices***				
	Lean Manufacturing	***Field Training***	***Demonstrates Fundamentals***	***Proficient in Task***	***Completion Date***
21	***Principles of 5S***				
22	***Weld to takt time***				
23	***Kaizen event participation***				

** AEA Online program will store all of the documentation of the completed competencies

Awarding Registered Apprentice Status

- ***The administrative assistant from the Career Academy of Pella will oversee the submission and documentation of all competencies through the RAPIDS system from the Department of Labor***

- ***Completion of all competencies will be certified by the principal at the Career Academy of Pella and submitted to the Department of Labor for processing***

Appendix A

(Apprentice Registration)

** Proper formatting**

Program Registration and
Apprenticeship Agreement
Office of Apprenticeship

U.S. Department of Labor
Employment and Training Administration

APPRENTICE REGISTRATION – SECTION II OMB No. 1205-0223 Expires:

Warning: This agreement does not constitute a certification under Title 29, CFR, Part 5 for the employment of the apprentice on Federally financed or assisted construction projects. Current certifications must be obtained from the Office of Apprenticeship (OA) or the recognized State Apprenticeship Agency shown below. (Item 24)

The program sponsor and apprentice agree to the terms of the Apprenticeship Standards incorporated as part of this Agreement. The sponsor will not discriminate in the selection and training of the apprentice in accordance with the Equal Opportunity Standards in Title 29 CFR Part 30, and Executive Order 11246. This agreement may be terminated by either of the parties, citing cause(s), with notification to the registration agency, in compliance with Title 29, CFR, Part 29

PART A: TO BE COMPLETED BY APPRENTICE. NOTE TO SPONSOR: PART A SHOULD ONLY BE FILLED OUT BY APPRENTICE.

1. Name (Last, First, Middle) and Address *Social Security Number
- -
(No., Street, City, State, Zip Code, Telephone Number)

2. Date of Birth (Mo., Day, Yr.)

3. Sex (Mark one)
☐ Male ☐ Female

Answer Both A and B (Voluntary)
(Definitions on reverse)

4. a. Ethnic Group (Mark one)
☐ Hispanic or Latino
☐ Not Hispanic or Latino

b. Race (Mark one or more)
☐ American Indian or Alaska native
☐ Asian
☐ Black or African American
☐ Native Hawaiian or other Pacific Islander
☐ White

5. Veteran Status (Mark one)
☐ Non-Veteran
☐ Veteran

6. Education Level (Mark one)
☐ 8th grade or less
☐ 9th to 12th grade
☐ GED
☐ High School Graduate or Greater
☐ Post Secondary or Technical Training

7a. Employment Status (Mark one) ☐ New Employee ☐ Existing Employee

7b. Career Connection (Mark one) (Instructions on reverse) ☐ None ☐ Pre-Apprenticeship ☐ Technical Training School ☐ Military Veterans
☐ Job Corps ☐ Youth Build ☐ HUD/STEP-UP ☐ Career Center Referral ☐ School-to-Registered Apprenticeship

8. Signature of Apprentice Date

9. Signature of Parent/Guardian (if minor) Date

PART B: SPONSOR: EXCEPT FOR ITEMS 6, 7, 8, 10a. - 10c, REMAINDER OF ITEMS REPOPULATED FROM PROGRAM REGISTRATION.

1. Sponsor Program No.
Sponsor Name and Address (No. Street, City, County, State, Zip Code)

2a Occupation (The work processes listed in the standards are part of this agreement).

2b Occupation Code:

2b.1. Interim Credentials
Only applicable to Part B, 3.b. and 3.c. (Mark one)
☐ Yes ☐ No

3. Occupation Training Approach (Mark one)
3a. ☐ Time-Based
3b. ☐ Competency-Based
3c. ☐ Hybrid

4. Term (Hrs., Mos., Yrs.)

5. Probationary Period (Hrs., Mos., Yrs.)

6. Credit for Previous Experience (Hrs., Mos., Yrs.)

7. Term Remaining (Hrs., Mos., Yrs.)

8. Date Apprenticeship Begins

9a. Related Instruction (Number of Hours Per Year)

9b. Apprentice Wages for Related Instruction
☐ Will Be Paid ☐ Will Not Be Paid

9c. Related Training Instruction Source
Associated Locksmiths of America,
Penn Foster

10. Wages: (Instructions on reverse)

10a. Pre-Apprenticeship Hourly Wage $ ____ 10b. Apprentice's Entry Hourly Wage $ ____ 10c. Journeyworker's Hourly Wage $ ____

Check Box	Period 1	2	3	4	5	6	7	8	9	10
10d. Term ☐ Hrs., ☐ Mos., or ☐ Yrs.										
10e. Wage Rate (Mark one) % ☐ or $ ☐										

11. Signature of Sponsor's Representative(s) Date Signed

13. Name and Address of Sponsor Designee to Receive Complaints (If applicable)

Appendix B
Job Shadowing Manual

Expectation of Parents:

- Sign consent form and provide emergency information.

Expectations of Student:

- Make connections with employer to confirm time and location for the job shadowing experience.
- Obtain written permission from your parent/guardian(s) using the form in this guide.
- Follow all rules of conduct that would exist at school.
- Show up at the workplace in advance of the time established for the experience.
- Dress appropriately for the worksite - These details should be clearly worked out through the CAP instructor.
- Introduce yourself at the reception area and be prepared with the name of your contact in the organization.
- Listen to all instructions and strictly observe all safety procedures.
- Be prepared with the student question sheet and any additional questions you may have prepared.
- Be respectful and attentive. Remember that your host is giving of his or her time to assist you.
- Write a thank you to your contact within 48 hours of the experience.
- Complete a shadowing reflection for submission to your instructor.

Expectations of Employer:

- Identify shadow employees that are enthusiastic toward working with high school students.
- Release shadow employees for the time period that has been established.
- Follow an established agenda for the shadowing experience.
- Stay with the student for the entire experience.
- Follow all expected safety requirements.
- Provide Personal Protective Equipment.

Expectations of the Career Academy of Pella:

- Make connections with employer to set up time and location for the job shadowing experience.
- Obtain written permission from your parent/guardian(s) using the form in this guide.
- Provide students with contact information to establish the experience.
- Accept liability for students while they are on the job site.
- Deal with any discipline issues that may arise.
- Require a post-experience reflection from the student.
- Allow for an exempt absence for the student.

Sample Shadowing Agenda

Previous safety training for apprenticeship candidates includes:

- Safety procedures and practices
- Welding related Job Safety Analysis (JSA) study and tests
- Lincoln Electric Safety videos
    - Electric shock
    - Fumes and gases
    - Fire and Explosion
    - Material safety data sheets
    - Personal protection equipment
    - Cutting safety

Prior to going on the factory floor, the weld engineering technician will review the current JSA for welding and also have the candidate watch a safety video on welding PPE. Candidates will be provided with the appropriate welding PPE. He or she will be introduced to the appropriate Plant Safety Personnel in the plant that they visit. When in the weld cell, the candidate will be introduced to the welding group leader and the welder. He or she will be allowed to observe the welder weld but <u>will not be allowed</u> to do any welding during this job shadow experience.

While in the weld cell, the weld engineering technician will take the opportunity to explain, demonstrate, and potentially allow the candidate to try some of the additional tasks that a welder does as part of the job. Those tasks include:

- Reading blueprints and weld symbols
- Checking piece parts for size using blueprints
- How to load a fixture
- How to set welding parameters using a WPS and settings chart
- How to develop a tacking plan
- 5S
- Proper workpiece grounding
- Weld inspection

JOB SHADOW PARENTAL PERMISSION FORM

I hereby give permission for _____ to participate in the job shadowing experience at _____(name of job site) on (specify date) _____.

- I have read through all the information provided and approve of my child's participation.
- I understand that my son/daughter and I will be responsible for providing his/her own transportation to and from the site.
- He/she must also make all arrangements such as: Appropriate dress, arrival/departure time, lunch, etc. prior to the date of the job shadowing.
- I also understand that my son/daughter is not to operate any power equipment during this experience.

I understand that this visit is considered a school activity and will take place during the school day and will count as an absence from school for my child if he/she <u>does not</u> show up at the job site. I am also aware that my son/daughter must complete a <u>minimum</u> of three (3) hours of shadowing or they will be considered truant from school for the day and will receive the appropriate disciplinary consequence.

Parent/Guardian Signature: _____

Date: _____

JOB SHADOW STUDENT AGREEMENT FORM

I, _____, understand that I am responsible for:

- My own transportation to and from the job shadowing site.
- Reporting to the site at the specified time.
- If a conflict arises, I know that I am to contact my instructor immediately.
- Dressing appropriately for the job.
- Behaving in a respectful and courteous way.

The work site will be the recognized authority while I job shadow. However,:

- I am still under the jurisdiction of Career Academy of Pella and am expected to follow all school rules.
- I am aware that my instructor may check to see if I arrived on time, stayed at least three (3) hours and behave in an appropriate way throughout the day.

After the job shadowing experience,:

- A thank you should be sent to the contact within 48 hours.
- I understand the questionnaire must be submitted no later than one week after job shadowing.

I have read the above agreement and understand my responsibilities:

Student Signature: _____

Today's Date: _____

(This form must be turned into your instructor prior to job shadowing.)

Job-Shadowing Questionnaire

Your name:

Date and time of job-shadowing experience:

Location of experience:

Name of individual shadowed:

Directions: **Ask** the following questions to the person with whom you are shadowing. Do not just give these questions to your person to fill out. INTERVIEW the person yourself. The interview sheet must be turned in within one week of the job shadow.

1. What activities/ duties/ responsibilities are involved in the job/ position?
2. What training and/ or education is required?
3. What are the working conditions?
4. What are the earning potentials?
5. What are the chances of advancement?
6. What skills/ personal qualities does an individual need to be successful?
7. Equipment -- machines, computers, tools, etc. -- needed to do the job [list a few essential items].
8. What product(s) or service(s) does the company provide?
9. Who are the customers of the product or service provided by the company?
10. Does the person you are job shadowing work independently or are they part of a team? Explain.

Questions for student to answer:

11. What other interesting and/ or useful information did you learn from this shadowing experience?

12. If you were offered a job related to this shadowing experience, would you accept the position?

Yes _____ No _____

- Please explain your answer in detail:

13. Would you like more information about this job/ career?

Yes _____ No _____

- What questions do you still have?

14. Do you think this experience was helpful to you? Why/ why not?

15. How was your job shadow leader helpful in this experience? Why/ why not?

Appendix C - Glossary of Terms

Apprenticeship - Method in which trainees learn a craft or trade by hands-on experience while working with a skilled worker.

Apprenticeship Standards - Department of Labor document that shows the requirements of what must be learned and mastered to achieve registered apprentice status.

Business Interview - A true employment interview between the candidate and potential businesses who are looking to hire a registered apprenticeship candidate.

Career Academy of Pella Interview - An interview with a student and CAP personnel to affirm that the student is ready and willing to enter into the apprenticeship program.

Job Shadowing - A career exploration activity where a student follows an employee at a business for a short period of time to learn about a particular occupation or industry. This opportunity is unpaid and under the liability of the career academy.

Offer Letter - Extension of an employment arrangement made by the employer in writing.

On-the-job training - Time spent in paid employment where standards are being learned, mastered, and documented as proficient for each apprenticeship.

Personal Protective Equipment (PPE) - All required safety equipment necessary for the occupation.

RAPIDS - Department of Labor software program that houses all documentation of standards completion by the apprentice.

Registered Apprenticeship Status - Final product awarded by the US Department of Labor certifying that the apprentice has met all of the standards and is nationally recognized as having the skills necessary as a person who has completed the program.

Screening - Pre-employment steps that must be completed before officially starting a position.

Appendix D – Completing a 2-Year Degree Through A Registered Apprenticeship Program

Unless some exception applies, there should be no cost to students or their parents for the Community College credits students take while in high school since these credits would draw down supplemental weighted funding from the State, as a part of the School's agreement with the Community College.

Tuition for the 18 credits selected after high school and leading toward the Community College degree, while the student is employed, will be at the normal College tuition rate then in place. Books and supplies would be additional. There may be scholarships or grants available that will be explored at the time the student prepares to enroll to assist with tuition and other costs. It is our goal to minimize any out-of-pocket expense to the student. Community college tuition may vary.

Business-conducted Mentor and Manager Training

A powerpoint template to review with new apprentice mentors and managers

Key Roles

- Mentor – technical competencies
- Manager or supervisor – behavior competencies

Mentor

- Experienced welder that will provide on-the-job training for apprentice *(not manager, but group leader is OK)*
- Available to answer questions from apprentice
- May only work with one apprentice
- Qualified to determine proficiency in technical competencies
- Complete Career Academy of Pella mentor training
- Complete background check by Career Academy of Pella

Technical Competencies

- Gas Metal Arc Welding (GMAW/MIG) – 0.035” electrode
- Gas Metal Arc Welding (GMAW/MIG) – 0.045” electrode
- Blueprint Reading for Welders and Fitters
- Symbols for Welding
- Hoist and Rigging
- Lean Manufacturing
- Safety & Related Instruction
- Weld Inspection
- Weld Layout and Fabrication

Technical Competency Ratings

- Demonstrates Fundamentals – apprentice can perform the task with some coaching
- Proficient in Task – apprentice performs task properly and consistently
- Completion Date – date apprentice completes final demonstration of competency

GMAW with 0.035” electrode

- Employer to provide whatever job specific training necessary to become successful
- Competency in the following
  - 3/16” (0.1”/0.2”) horizontal fillet welds in T joint
  - 5/16” (0.3”) horizontal fillet welds in lap joint
  - Square groove butt joint in flat position
  - Flare bevel groove T joint in flat and horizontal position
  - 3/16” (0.1”/0.2”) horizontal fillet weld in T joint around pipe
  - 5/16” (0.3”) horizontal fillet weld in T joint around pipe

GMAW with 0.045” electrode

- Employer to provide whatever job specific training necessary to become successful

- Competency in the following
  - 5/16” (0.2”/0.3”) horizontal fillet welds in T joint (1 pass)
  - 3/8” (0.4”)horizontal fillet welds in T joint (2 passes)
  - 1/2” (0.5”)horizontal fillet weld in T joint (3 passes)
  - 5/16” (0.2”/0.3”) horizontal fillet weld in T joint around pipe
  - Single bevel, vee groove, and flare bevel groove welds

Weld Types

Fillet Weld, T Joint

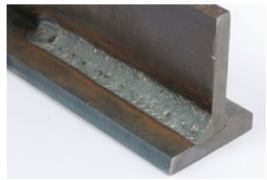

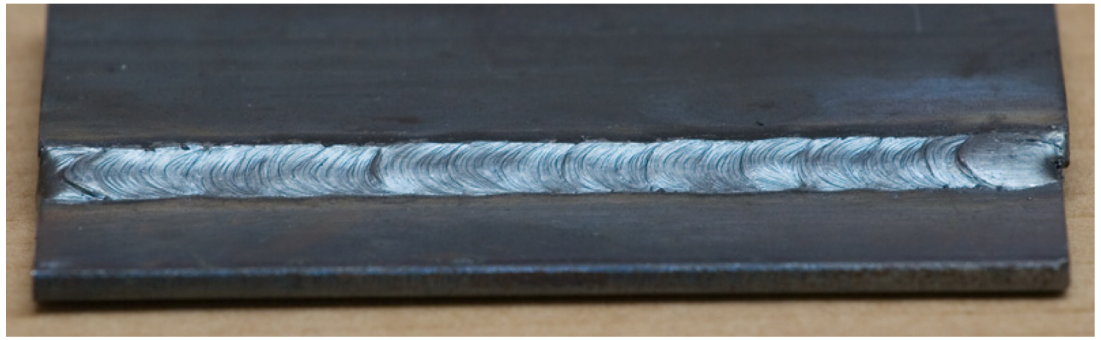

Fillet weld, lap joint

Weld Types

Flare bevel groove, T joint (horizontal)

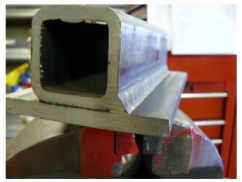

9	Flare bevel	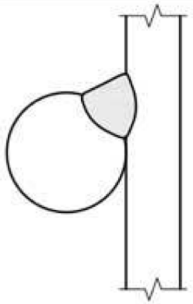	

Flare bevel groove, T joint (flat)

Weld Types

Fillet weld T joint around pipe

Groove welds

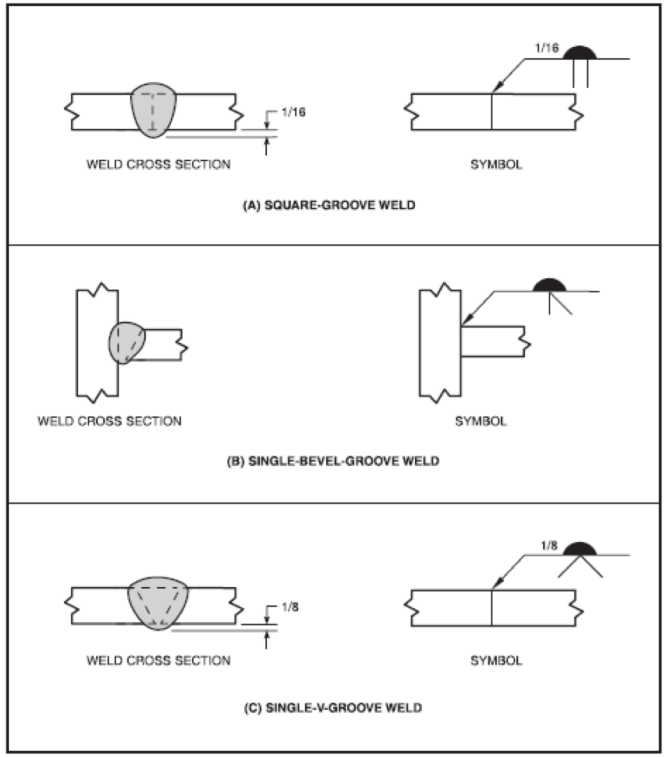

Blueprint Reading

- Classroom (if available) or field training
- Document field training, demonstrate fundamentals, and proficiency

Welding Symbols

- Classroom (if available) or field training
- Document field training, demonstrate fundamentals, and proficiency

Hoist and Rigging

- Provide this training <u>after</u> apprentice turns 18 years old
- 40 hours (approximate) – *training and experience combined*
- Classroom (if available) or field training
- Safety procedures
- Use of straps, cables, chains
- Use of lifting devices
- Estimation of load weights and center of gravity
- Moving, loading and manipulation of loads

Jigs and Fixtures

- Part of welding hours
- Verify shape and size of parts meet blueprints
- Assemble metal parts in jigs and fixtures
- Tack parts together
- Document field training, demonstrate fundamentals, proficiency

Safety

- Job safety analysis or job hazard analysis
- Hazard communication
- Employer safety program training
- Document field or classroom training, demonstrates fundamentals, proficiency

Lean Manufacturing

- Classroom or field training
- Principles of 5S
- Weld to takt time *(this will qualify for most of the time)*
- One or more kaizen events

Weld Inspection

- Classroom or field training
- Visual examination of surfaces prior to welding per company standards
- Visual examination of completed welds for acceptance based on company acceptance criteria standards
- Identify common weld discontinuities, causes, and how to prevent them from occurring

Weld Layout and Fabrication

- Classroom or field training
- Layout and tack weldments using a layout table or without fixtures
- Demonstrate proficiency in the use of tape measure, straight edge, square, clamps, and other layout tools

Manager or Supervisor

- Welding experience is not a requirement but certainly helps
- Available to answer questions from apprentice
- May supervise multiple apprentices
- Qualified to determine proficiency in behavioral competencies
- Recommended to complete Career Academy of Pella mentor training
- No background check by Career Academy of Pella is required

Behavioral Competency Ratings

- Exceeds targets – 4
- Consistently achieves targets – 3
- Meets some targets – 2
- Not meeting targets – 1
- Not applicable – N/A

Apprentices must achieve a “3” rating in all categories to have a successful completed apprenticeship

Behavioral Competencies

- Teamwork
- Communication
- Integrity
- Respect
- Customer focus
- Attendance
- Work ethic

Behavioral Competencies Review Frequency

- End of summer employment
- End of first semester senior year
- End of second semester senior year
- As part of normal team member review cycle post high school graduation throughout completion of apprenticeship

Career Academy-conducted Mentor and Manager Training

A powerpoint template to review with new apprentice mentors and managers

Introductions

1. Name
2. High School Graduated
3. College/University/Trade School Attended
4. Current Role/Position
5. When you went to high school, what did you enjoy the most about high school ?
6. When you went to high school, what did you enjoy the least about high school ?

What do we want them to accomplish ?

- Get comfortable working with high school students
- Learn about the role of a mentor
- Education now versus the past **

School Expectations of the Apprenticeship Mentors - Relationships

- Think of assisting in solving the problem -- Coaching, Not Telling
- Adults not solving problem for the students
- Do not assume
- Be prepared
- Be consistent
- Be engaged

**** Communicate early on issues - Learning Opportunities**

School Expectations of the Apprenticeship Mentors - Logistics

- Consistent communication with the career academy (Melanie Bryan) on the status of the apprentice
- Documentation on each competency

We Are Pella

PELLA COMMUNITY SCHOOLS

Maximizing Life's Opportunities for Every Child

Our Brand Pillars - What “We Are” all about

The Pella Community Schools are...

- pursuing excellence
- building caring relationships
- respecting and developing every child’s potential

We Are Pella Means We Are...

Purposeful - We are deliberate in our commitment to every student.

Personal - We believe that all students are individuals who have different wants, needs, and desires.

Passionate - We have a fire within us that wants to see all students develop the skills and abilities that will enable them to reach their dreams.

Public - We exist for the benefit of everyone.

High School Now Versus The Past

- What was your goal in high school as a student?
- How has school changed in your opinion?
- Where do you see education going in the next ten years?
- How do you feel technology has impacted education?

Some Ideas for Talking with Students:

1) Check for student understanding:

   Do you understand ? NO

   Please state what you are thinking ? YES

2) Learning Styles: Visual, Auditory, Verbal, etc.

3) Use Humor, Not Sarcasm - They appreciate it and you will relax.

4) Find out their interests

5) Listen, Listen, Listen

Communication Channels

a. Appropriate way to contact students
   i. What if a student contacts me ?
   ii. Business or School email ?
   iii. NO personal email or text
   iv. NO meeting outside of the school
   v. Must use Vermeer email
b. Language -- Same wavelength/Common language
   i. Always check for understanding -- Student restating their thinking/thoughts
c. Dominant personality or Introvert personality -- How to deal with it in a group ?
d. School: Google world versus Business world
e. Google account to share with the instructor -- Cannot share the address with kids (Google versus pdf)

First, it is vitally important to make it a positive experience. The teacher and mentor will make or break this program.

Department of Labor Registered Apprenticeship in Welding Contract

The official participant agreement

Apprenticeship

Registered as part of the National Apprenticeship Program in accordance with the basic Standards of Apprenticeship established by the Secretary of Labor

Developed by:

Richard D. Madden
Apprenticeship and Training Representative
USDOL - Office of Apprenticeship
Des Moines Iowa 50309

Registration Date:

Program Number:

2018-IA-70429

Organization ID:

42-6038204

Approved by:

Greer Sisson, State Director
USDOL - Office of Apprenticeship

REVISION #1

Registered Apprenticeship Program Standards

Sponsored by:

Pella Community Schools

In Partnership with

GREATNESS STEMS FROM IOWANS

GOVERNOR'S STEM ADVISORY COUNCIL

and

PROJECT LEAD THE WAY PLTW

Occupation(s)	*O*Net Code*	*RAPIDS Code*
Welder, Combination (Advanced Manufacturing)	**51-4121.06**	**0622CB**

Table of Contents:

1. Foreword 3
2. Provisional Registration 3
3. Program Administration 3
4. Duties and Responsibilities of the Program Sponsor 3
5. Duties and Responsibilities of the Apprentice 4
6. Duties and Responsibilities of Participating Employers' 4
7. Duties and Responsibilities of the Mentor/Manager/Professional/Team Leader 5
8. Periodic Review 5
9. Safety and Health Training 5
10. Apprenticeship Agreement 5
11. Credit for Prior Experience 6
12. Transfer of an Apprentice 6
13. Supervision of Apprentices 6
14. Completion Certificate/Interim Credentials 7
15. Identification of the Registration Agency 7
16. Program Registration, Amendments, Modifications, Deregistration 7
17. Notice to Registration Agency of Apprenticeship Agreements 7
18. Equal Employment Opportunity in Apprenticeship 7
19. Affirmative Action Plan and Selection 8
20. Adjustment of Differences and Complaint Procedures 8
21. Maintenance of Records 9
22. Consultants and Technical Assistance 9
23. Conformance with Federal Laws and Regulations 9
24. Official Adoption of Apprenticeship Standards 10
25. Key Components, Terms, and Definitions 11

Appendices:

Appendix A1: Job Training and Education Outlines – Welder, Combination

1. On-the-Job Learning Outline (work experience)– Competency Based
2. Qualifications for Apprenticeship
3. Term of the Apprenticeship Program
4. Probationary Period
5. Ratio of Professionals to Apprentices
6. Progressive Wage Schedule
7. Apprenticeship Instructor Qualifications
8. Job Related Technical Education

Appendix B. The Career Academy of Pella Apprenticeship Agreement (Example)
Appendix C. Affirmative Action Plan (if Applicable)
Appendix D. Qualifications and Selection Procedure (if Applicable)
Appendix E. Participating Employer Acceptance Form

Registered Apprenticeship Program Standards

Section 1 – Foreword

Career Academy of Pella recognizes that experience has demonstrated that a practical and cost effective method of preparing students for superior performance in skilled occupations is through a planned registered apprenticeship – a training concept which provides for employment and training under actual job conditions supervised by skilled professionals. In addition, the Apprentice's knowledge and understanding of the occupation, through practical experience, is enhanced through participation in approved courses of job related technical and supplemental education.

The Career Academy of Pella recognizes the need for continuous training to maintain the high level of skill and competence expected by industry. Recognizing the responsibility for training rests with those in the industry that are benefactors of a skilled workforce, Career Academy of Pella has formulated and adopted these Apprenticeship Standards for the training of Apprentices in the professions identified in this document.

Section 2- Provisional Registration *29CFR § 29.3 (g)(1 &(2)*

All new apprenticeship programs receive provisional registration for one year prior to moving into active program status. The provisional registration requires that the Office of Apprenticeship conduct a program quality assessment prior to the program's anniversary in order to determine whether or not the program is following its registered training plan and operating in accordance with the federal apprenticeship regulations. Pending the results of the quality assessment, the program will continue in provisional status, move to permanent active status, or be de-registered. Technical assistance will be available to assist the sponsor in improving the quality of their training program during duration of their program.

Section 3 – Program Administration

Career Academy of Pella is responsible for the administration of all aspects of a Registered Apprenticeship program. Career Academy of Pella, at their discretion, may establish an Apprenticeship and Training Committee (ATC) to carry out the responsibilities and duties required of a Program Sponsor as described in these Standards of Apprenticeship. If an ATC is established by Career Academy of Pella, a list of the membership and the areas of expertise they represent must be provided to the Registration Agency. While the Office of Apprenticeship recommends that Career Academy of Pella utilize the services of an ATC, Career Academy of Pella may also elect to administer the program without the services of an ATC.

Responsibilities of Career Academy of Pella /ATC:

A. Cooperate in the selection of apprentices as outlined in this program.
B. Ensure that all apprentices are under written apprenticeship agreements.
C. Review and recommend apprenticeship activities in accordance with this program.
D. Establish the minimum standards of education and experience required of apprentices.
E. Hear and resolve all complaints of violations of apprenticeship agreements.
F. Arrange evaluations of apprentices' progress in manipulative skills and technical knowledge.
G. Maintain records of all apprentices, showing their education, experience, and progress in learning the occupation.
H. Certify to the Registration Agency that apprentices have successfully completed their apprenticeship program.
I. Notify, within 45 days, the Registration Agency of all new apprentices to be registered, credit granted, suspensions for any reason, reinstatements, extensions, completions and cancellations with explanation of causes.
J. Supervise all the provisions of the local standards and be responsible, in general, for the successful operation of the standards by performing the duties here listed. Cooperate with public and private agencies, which can be of assistance in obtaining publicity to develop public support of apprenticeship. Keep in contact with all parties concerned, including apprentices, employers, and mentors.

K. Provide each apprentice with a copy of these standards, along with any applicable written rules and policies. Require the apprentice to sign an acknowledgment receipt of same. Follow this procedure whenever revisions or modifications are made to the rules and policies.

L. When notified that an apprentice's related instruction or on-the-job progress is found to be unsatisfactory, the sponsor will determine whether the apprentice should continue in a probationary status and may require the apprentice to repeat a process or series of processes before advancing to the next wage classification. Should it be found in the course of this determination that the apprentice does not have the ability or desire to continue the training to become a mentor the sponsor will, after the apprentice has been given adequate assistance and opportunity for corrective action, terminate the apprenticeship agreement, as provided in 29 CFR § 29.7(h)(1)(2)(i) and (ii).

M. The employer will provide each registered apprentice with continuous employment sufficient to provide the opportunity for completion of his or her apprenticeship program. If the employer is unable to fulfill its training and/or employment obligation in conformance with these standards, the sponsor will with the apprentice's consent, make a good-faith effort to facilitate a transfer of the apprentice to another registered sponsor for completion of the apprenticeship.

If conditions of business make it necessary to temporarily suspend the period of apprenticeship. Apprentices suspended for this reason will be given the opportunity to resume their active apprenticeships before any additional apprentices are employed. The suspension and reinstatement of apprentices shall be done in relation to retention of the most advanced apprentice and in accordance with the company policy.

Section 4 – Duties and Responsibilities of the Apprentice

Apprentices, having read these Standards formulated by the Career Academy of Pella and signed an Apprenticeship Agreement with Career Academy of Pella agree to all the terms and conditions contained therein and agree to abide by the Career Academy of Pella rules and policies, including any amendments, serve such time, perform such manual training, and study such subjects as the Sponsor may deem necessary to become a skilled employee for the occupations identified for the industry.

In signing the Apprenticeship Agreement, apprentices assume the following responsibilities and obligations under the apprenticeship program:

1. Perform diligently and faithfully the work of the occupation and other pertinent duties assigned by the employer in accordance with the provisions of these Standards.
2. Respect the property of the employer and abide by the working rules and regulations of the employer.
3. Attend and satisfactorily complete the required hours in the OJL (on the job learning) and in job related technical instruction in subjects related to the occupation as provided under these Standards.
4. Maintain and make available such records of work experience and training received on-the-job and in related instruction as may be required by the Sponsor.
5. Develop and practice safe working habits and work in such a manner as to assure his/her personal safety and that of other fellow workers.
6. Work for the employer to whom the apprentice is assigned for the completion of apprenticeship, unless reassigned to another employer or the Apprenticeship Agreement is terminated by the Sponsor.

Section 5 – Duties and Responsibilities of the participating employers'

1. Have the necessary facilities to assure effective training in all aspects of the profession.
2. Assure apprentices are under the supervision of qualified professionals.
3. Exercise precaution for the health and safety of apprentices in the workplace at all times.
4. Provide a positive learning environment and encourage training at all levels.
5. Provide fair and equitable treatment for all apprentices.
6. Provide the foundation for the apprenticeship training and the continuum for passing the skills on to the future.
7. Notify Career Academy of Pella of any change in status of apprentices.

Section 6 – Duties and Responsibilities of the Mentor/Manager/Professional/Team Leader

1. Assurance of qualified training personnel and adequate supervision on the job.
2. Provide positive leadership and proper supervision.

3. Help integrate the apprentices into the working environment and navigate within the enterprise
4. Hold regularly scheduled 1:1 meeting with apprentices
5. Acts as the "go to" person for questions with the day-to-day work of the apprentices
6. Provide honest and constructive feedback to the apprentice in a way that will assist in their growth and development.
7. Demonstrate best practices on the job.
8. Allow the apprentice to practice new skills or experiment with theories or ideas learned in the related instruction courses.
9. Provide fair and equitable treatment to all apprentices and recognize and reward excellence.
10. Assist with paperwork required of the program (i.e., on-the-job training records, related instruction records, and other record keeping as may be required).

Section 7 – Periodic Review ***29 CFR § 29.5(b)(6)***

1. Each Apprentice shall be responsible for maintaining a record of his or her work experience/training on the job and in related instruction and for having this record verified by Career Academy of Pella /Participating Employer for inclusion in the Apprentice's record folder. This record will be included in each Apprentice's file maintained by the Career Academy of Pella.
2. Before each period of advancement, or at any other time when conditions warrant, the Sponsor shall examine the Apprentices to determine whether they have made satisfactory progress. If the Apprentices' related training or work progress is found unsatisfactory, they may be required to repeat a process or series of processes in which they are deficient, before advancing to the next step.
3. Consistent with the terms of the Apprenticeship Agreement, should it be found that the Apprentice does not have the ability or desire to continue the training to become a skilled professional, Career Academy of Pella will, after the Apprentice has been given adequate assistance and opportunity for corrective action, terminate the Apprenticeship Agreement.
4. Written records of progress evaluations and corrective and final actions shall be maintained. The Registration Agency will be notified of all cancellations.

Section 8 – Safety and Health Training ***29 CFR § 29.5(b)(9)***

1. All Apprentices shall receive continuous instruction in safe and healthful work practices both on-the-job and during related instruction.
2. Career Academy of Pella and the participating employer shall insure all apprentices receive instruction in safe and healthful work practices both on the job and in related instruction that are in compliance with the Occupational Safety and Health Administration standards promulgated by the Secretary of Labor under 29 U.S.C. 651 et seq., as amended, or state standards that have been found to be at least as effective as the federal standards.

Section 9 – Apprenticeship Agreement ***29 CFR §§ 29.3(d), 29.3(e), and 29.5(b)(11)***

1. After an applicant for apprenticeship has been selected, but before employment as an apprentice or enrollment in related instruction, the apprentice will be covered by a written apprenticeship agreement (Appendix B) which can be submitted electronically through the Registered Apprenticeship Partners Information Data System, using the Apprentice Electronic Registration process by the sponsor and the apprentice and approved by and registered with the Registration Agency. Such agreement will contain a statement making the terms and conditions of these standards a part of the agreement as though expressly written therein. The sponsor shall provide a copy of the apprenticeship agreement to the apprentice, the Registration Agency, and the participating employer. An additional copy will be provided to the veteran's state approving agency for those veteran apprentices desiring access to any benefits to which they are entitled.
2. Prior to signing the apprenticeship agreement, each selected applicant will be given an opportunity to read and review these standards, Career Academy of Pella written rules and policies, and the apprenticeship agreement.
3. The Registration Agency will be advised within 45 days of the execution of each apprenticeship agreement and will be given all the information required for registering the apprentice.

Section 10 - Credit for Prior Experience ***29 CFR §§ 29.5(b)(12) and 30.4(c)(8)***

The Career Academy of Pella may grant credit towards the term of apprenticeship to new apprentices who demonstrate previous acquisition of skills or knowledge equivalent to that which would be received under these Standards.

1. Apprentice applicants seeking credit for previous experience gained outside the supervision of the Sponsor must submit the request at the time of application and furnish such records to Career Academy of Pella to substantiate the claim.

Applicants requesting such credit who are selected into the apprenticeship program will start at the beginning wage rate. The request for credit will be evaluated and a determination made by Career Academy of Pella during the probationary period when actual on-the-job and related instruction performance can be examined. Prior to completion of the probationary period, the amount of credit to be awarded will be determined after review of the apprentice's previous work and training/education record and evaluation of the apprentice's performance and demonstrated skill and knowledge during the probationary period.

2. An apprentice granted credit will be advanced to the wage rate designated for the period to which such credit accrues. The Registration Agency will be advised of any credit granted and the wage rate to which the apprentice is advanced.
3. The granting of advanced standing will be uniformly applied to all apprentices

Section 11 – Transfer of Training ***29 CFR § 29.5(b)(13)***

The transfer of an apprentice between apprenticeship programs and within an apprenticeship program must be based on agreement between the apprentice and the affected apprenticeship committee or program sponsors, and must comply with the following requirements:

i. The transferring apprentice must be provided a transcript of related instruction and on-the-job learning by the committee or program sponsor:
ii. Transfer must be to the same occupation; and
iii. A new apprenticeship agreement must be executed when the transfer occurs between the program sponsors.

If the employer is unable to fulfill his/her training obligation due to lack of work or failure to conform to these Standards the Sponsor will make every effort to refer the apprentice with his/her consent to another employer. This will provide the apprentice an opportunity for continuous employment and completion of their apprenticeship program. The apprentice must receive credit from the new employer for the training already satisfactorily completed.

Section 12 – Supervision of Apprentices ***29 CFR § 29.5(b)(14)***

1. The Employer will be responsible for the training of the apprentice on the job. Apprentices will be under the general supervision of the Sponsor and under the direct supervision of the Participating Employer's professionals to whom they are assigned. The Program Director of apprentice(s) designated by the employer will be responsible for the apprentice's work assignments, and will ensure the apprentice is working under the supervision of a skilled professional, evaluation of work performance, and completion and submittal of progress reports to Career Academy of Pella. No apprentice shall work without proper or adequate supervision. For the purpose of these apprenticeship standards, adequate or proper supervision of the apprentice means the apprentice is under the supervision of a fully qualified mentor or supervisor at all times who is responsible for making work assignments, providing OJL, and ensuring safety at the worksite.
2. To adequately or properly supervise an apprentice does not mean the apprentice must be within eyesight or reach of the supervisor, but that the supervisor knows what the apprentice is working on; is readily available to the apprentice; and is making sure the apprentice has the necessary instruction and guidance to perform tasks safely, correctly, and efficiently.

Section 13 – Completion Certificate/Interim Credentials ***29 CFR § 29.5(b)(15)&(16)] and Circular 2015-02***

1. Upon satisfactory completion of the requirements of the apprenticeship program as established in these Standards, the Sponsor will so certify to the Registration Agency and request the awarding of Certificate of Completion of Apprenticeship to the completing apprentice(s).
2. Such requests may be completed electronically using the Registered Apprenticeship Partners Information Data System (RAPIDS).
3. The appropriate documentation for both on-the-job learning and the related instruction as may be required by the Registration Agency.

Certificate of Training *(if applicable)*

4. A Certificate of Training may be requested from and issued by the U.S. Department of Labor's Office of Apprenticeship, Office of the Administrator (the Registration Agency), only for a registered apprentice who has been certified by the sponsor as having successfully met the requirements to receive an interim credential as identified in these standards. The

Registration Agency may require that a record of completed OJL and related instruction for the apprentice accompany such requests.

Section 14 – Identification of the Registration Agency ***29 CFR § 29.5(b)(17)***

The Registration Agency is the U.S. Department of Labor – Office of Apprenticeship.
USDOL/Office of Apprenticeship
210 Walnut Room 715
Des Moines Iowa 50309
515.284.4690

Section 15 – Program Registration, Amendments, Modifications, and Deregistration ***29CFR § 29.5(b)(18)***

1. These Apprenticeship Standards will, upon adoption by Career Academy of Pella, be submitted to the Registration Agency for approval. Such approval will be required before implementation of the Apprenticeship Program.
2. Career Academy of Pella reserves the right to discontinue or cancel, at any time, the Program set forth herein. The Registration Agency shall be notified promptly of any decision to cancel the Apprenticeship Program.
3. Deregistration of these Standards of Apprenticeship may be initiated by the Registration Agency for failure of Career Academy of Pella to abide by the provisions herein.
4. These Standards of Apprenticeship may be modified or amended at any time by Career Academy of Pella.
5. A copy of each amendment adopted shall be furnished to each Registered Apprentice.
6. All modifications and amendments must be approved by the Registration Agency prior to implementation.
7. A copy of each amendment or modification adopted will be furnished to each apprentice to whom the amendment or modification applies.

Section 16 – Notice to Registration Agency of Apprenticeship Agreements ***29 CFR § 29.5(b)(19)***

Career Academy of Pella or its designated apprenticeship committee (if established) shall promptly notify the Registration Agency within 45 days of all new registration agreements, modifications, and amendments; credit granted to apprentices; suspensions for any reason; reinstatements; extensions; cancellations; transfers; and any requests for Certificates of Completion; and notice of transfers, suspensions, and cancellations and a statement of the reasons therefore.

Section 17 – Equal Employment Opportunity in Apprenticeship ***29 CFR §§ 29.5(b)(21) and 30.3(b)***

1. Career Academy of Pella will not discriminate against apprenticeship applicants or apprentices based on race, color, religion, national origin, sex (including pregnancy and gender identity) sexual orientation, genetic orientation or because they are an individual with a disability of a person 40 years old or older. Career Academy of Pella will take affirmative action to provide equal opportunity in apprenticeship and will operate the apprenticeship program as required under Title 29 of the Code of Federal Regulations, part 30.

2. Pella Community Schools offers career and technical programs in the following services areas: Agriculture Education, Business Education, Family and Consumer Science Education, Industrial Education. It is the policy of the Pella Community School District not to discriminate on the basis of race, color, national origin, sex, disability, religion, creed, age (for employment, marital status (for programs), sexual orientation, gender identity and socioeconomic status (for programs) in its educational programs and its employment practices. There is a grievance procedure for processing complaints of discrimination.

Section 18- Affirmative Action Plan and Selection ***29 CFR §§ 29.5(b)(21), 30.4, and 30.5***

Sponsors with 5 or more registered apprentices are required to adopt an affirmative action plan *(Appendix C)* and selection procedures *(Appendix D)*, which will become part of these standards of apprenticeship. However, the Office of Apprenticeship encourages the development of these two plans for all programs regardless of apprentice numbers. For programs with fewer than 5 apprentices, these plans are not required, and the sponsor may continue to select apprentices in conformance with its current human resources and equal employment opportunity hiring policies

Section 19 – Adjustment of Differences and Complaint Procedure ***29 CFR §§ 29.5(b)(22), 29 CFR29.7(k) and 30.11***

1. Career Academy of Pella will have full authority to enforce these standards. Its decision will be final and binding on the employer, and the apprentice, unless otherwise noted below.
2. If an applicant or an apprentice believes an issue exists that adversely affects his/her participation in the apprenticeship program or violates the provisions of the apprenticeship agreement or standards, the applicant or apprentice may seek relief through one or more of the following avenues, based on the nature of the issue:

29 CFR § 29.7(k)

1. The sponsor will hear and resolve all complaints of violations concerning the apprenticeship agreement and the registered apprenticeship standards for which written notification is received within 15 days of the alleged violations. The sponsor will make such rulings as it deems necessary in each individual case within 30 days of receiving the written notification. Either party to the apprenticeship agreement may consult with the Registration Agency for an interpretation of any provision of these standards over which differences occur. The name and address of the appropriate authority to receive, process, and dispose of complaints is:

   Name: Eric Nelson
   Title: Principal, Pella High School
   Address: 210 E. University Street, Pella, IA 50219
   (office) 641-628-3870
   (cell) 641-780-5860
   (fax) 641-628-7402

29 CFR § 30.11

1. Any apprentice or applicant for apprenticeship who believes that he/she has been discriminated against on the basis of race, color, religion, national origin, or sex with regard to apprenticeship or that the equal opportunity standards with respect to his/her selection have not been followed in the operation of an apprenticeship program may, personally or through an authorized representative, file a complaint with the Registration Agency or, at the apprentice or applicant's election, with the private review body established by the program sponsor (if applicable).
2. The complaint shall be in writing and shall be signed by the complainant. It must include the name, address, and telephone number of the person allegedly discriminated against, the program sponsor involved, and a brief description of the circumstances of the failure to apply the equal opportunity standards provided in 29 CFR § 30.
3. The complaint must be filed not later than 180 days from the date of the alleged discrimination or specified failure to follow the equal opportunity standards, and in the case of complaints filed directly with the review body designated by the program sponsor to review such complaints, any referral of such complaint by the complainant to the Registration Agency must occur within the time limitation stated above or 30 days from the final decision of such review body, whichever is later. The time may be extended by the Registration Agency for good cause shown.
4. Complaints of discrimination and failure to follow equal opportunity standards in the apprenticeship program may be filed and processed under 29 CFR § 30 and the procedures set forth above.
5. The sponsor shall provide written notice of its complaint procedure to all applicants for apprenticeship and all apprentices.

Section 20 – Maintenance of Records ***29 CFR § § 29.5(b)(6),29.5(b)(23, and 30.08***

1. Career Academy of Pella is responsible for maintaining, at a minimum, the following records:
   - summary of the qualifications of each applicant;
   - basis for evaluation and for selection or rejection of each applicant;
   - records pertaining to interview;
   - the original application;
   - records of each apprentice's OJL;
   - related instruction reviews and evaluations;
   - progress evaluations;
   - record of job assignments, promotions, demotions, layoffs, or terminations, rates of pay; and
   - any other actions pertaining to the apprenticeship

2. Career Academy of Pella will also maintain all records relating to apprenticeship applications (whether selected or not), including, but not limited to, the sponsor's outreach, recruitment, interview, and selection process. Such records will clearly identify minority and female (minority and nonminority) applicants and must include, among other things, the basis for evaluation and for selection or rejection of each applicant. For a complete list of records that each sponsor is required to maintain under 29 CFR § 30, please refer to 29 CFR § 30.8.
3. All such records are the property of Career Academy of Pella and will be maintained for a period of 5 years from the date of last action. They will be made available to the Registration Agency upon request.

Section 21 – Consultants/Technical Assistance

Advice and assistance in the successful operation of this Apprenticeship Program will be available at any time, upon request by Career Academy of Pella, from representatives of the U.S. Department of Labor, Office of Apprenticeship Des Moines, Iowa.

Section 22 – Conformance with Federal Laws and Regulations

No Section of these Standards of Apprenticeship shall be construed as permitting violation of any Federal Law or Regulation.

Section 23 – Official Adoption of Apprenticeship Standards

Career Academy of Pella officially adopts these Standards of Apprenticeship on *this* _____ *day of* _____, *2018.*

_____
Signatory Name

_____
Title

Definitions

APPRENTICE: Any individual employed by the employer meeting the qualifications described in the Standards of Apprenticeship who has signed an Apprenticeship Agreement with the Sponsor for training and related instruction under these Standards, and who is registered with the Registration Agency.

APPRENTICESHIP AGENT: An individual identified by Registration Agency whose role it is to engage and support the Program Sponsor and/or the Sponsor effort in creating, maintaining, reporting and monitoring their Apprenticeship Program. The Program Sponsor's delegate that will represent the program and lead the administration of the program.

APPRENTICE ELECTRONIC REGISTRATION (AER): Is an electronic tool that allows for instantaneous transmission of apprentice data for more efficient registration of apprentices and provides the Sponsor with a faster turnaround on their submissions and access to their apprenticeship program data.

APPRENTICESHIP AGREEMENT: The written agreement between the apprentice and the Sponsor setting forth the responsibilities and obligations of all parties to the Apprenticeship Agreement with respect to the Apprentice's employment and training under these Standards. Each Apprenticeship Agreement must be registered with the Registration Agency.

APPRENTICESHIP COMMITTEE): Apprenticeship Committee means those persons designated by the sponsor to act as an agent for the sponsor in the administration of the program. A committee may be either joint or non-joint as follows:

(1) A non-joint committee which may also be known as a unilateral or group non- joint (may include workers) committee has employer representatives but does not have a bone fide collective bargaining agent as a participant.

CERTIFICATE OF COMPLETION OF APPRENTICESHIP: The Certificate of Completion of Apprenticeship issued by the Registration Agency to those registered apprentices certified and documented as successfully completing the apprentice training requirements outlined in these Standards of Apprenticeship.

CERTIFICATE OF TRAINING: A Certificate of Training may be issued by the U.S. Department of Labor's, Office of Apprenticeship Administrator to those registered apprentices that the Sponsor has certified in writing to the Registration Agency that the apprentice has successfully met the requirements to receive an interim credential. *(if applicable)*

COMPETENCY-BASED OCCUPATION: Means the attainment of manual, mechanical or technical skills and knowledge, as specified by an occupation standard and demonstrated by an appropriate written and hands-on proficiency measurement.

ELECTRONIC MEDIA: Media that utilize electronics or electromechanical energy for the end user *(audience)* to access the content; and includes, but is not limited to, electronic storage media, transmission media, the Internet, extranet, lease lines, dial-up lines, private networks, and the physical movement of removable/transportable electronic media and/or interactive distance learning.

EMPLOYER: Means any person or organization employing an apprentice whether or not such person or organization is a party to an Apprenticeship Agreement with the apprentice.

HYBRID: An occupation using an apprenticeship approach that measures the individual apprentice's skill acquisition through a combination of a specified minimum number of hours of on-the-job learning and the successful demonstration of competency as described in a work process schedule.

O*NET-SOC CODE: The Occupational Information Network (O*NET) codes and titles are based on the new Standard Occupational Classification (SOC) system mandated by the federal Office of Management and Budget for use in collecting statistical information on occupations. The O*NET classification uses an 8-digit O*NET-SOC code. Use of the SOC classification as a basis for the O*NET codes ensures that O*NET information can be readily linked to labor market information such as occupational employment and wage data at the national, State, and local levels.

ON-THE-JOB LEARNING (OJL): Tasks learned on-the-job in which the apprentice must become proficient before a completion certificate is awarded. The learning must be through structured, supervised work experience.

PROFESSIONAL: A worker who has attained a level of skill, abilities and competencies recognized within an industry as having mastered the skills and competencies required for the occupation. *(Use of the term may also refer to a mentor, technician, specialist or other skilled worker who has documented sufficient skills and knowledge of an occupation, either through formal apprenticeship or through practical on-the-job experience and formal training.)*

PROGRAM SPONSOR: Career Academy of Pella, in whose name the Standards of Apprenticeship will be approved, and which will have the full responsibility for administration and operation of the apprenticeship program.

PROVISIONAL REGISTRATION: Means the 1-year initial provisional approval of newly registered programs that meet the required standards for program registration, after which program approval may be made permanent, continued as provisional, or rescinded following a review by the Registration Agency, as provided for in the criteria describe in §29.3 (g) and (h).

REGISTERED APPRENTICESHIP PARTNERS INFORMATION DATA SYSTEM (RAPIDS): The Federal system which provides for the automated collection, retention, updating, retrieval and summarization of information related to apprentices and apprenticeship programs.

REGISTRATION AGENCY: Means the U.S. Department of Labor, Office of Apprenticeship or a recognized State Apprenticeship Agency that has responsibility for registering apprenticeship programs and apprentices; providing technical assistance; conducting reviews for compliance with Title 29, CFR parts 29 and 30 and quality assurance assessments.

RELATED TECHNICAL INSTRUCTION: An organized and systematic form of instruction designed to provide the apprentice with the knowledge of the theoretical and technical subjects related to the apprentice's occupation. Such instruction may be given in a classroom, through occupational or industrial

courses, or by correspondence courses of equivalent value, electronic media, or other forms of self-study approved by the Registration Agency.

STANDARDS OF APPRENTICESHIP: This entire document including all appendices and attachments hereto, and any future modifications or additions approved by the Registration Agency.

SPONSOR: Any in whose name these Standards of Apprenticeship will be adopted and registered.

TIME-BASED OCCUPATION: The time-based approach measures skill acquisition through the individual apprentice's completion of at least 2,000 hours of on-the-job learning as described in a work process schedule. *(if applicable)*

TRANSFER: A shift of apprenticeship agreement from one program to another or from one employer within a program to another employer within that same program, where there is agreement between the apprentice and the affected apprenticeship committee or program sponsor.

	*O*Net Code*	*RAPIDS Code*
Welder, Combination (Advanced Manufacturing)	**51-4121.06**	**0622CB**

Section 1 – On-the-Job Learning (Work Experience) *29 CFR § 29.5(b)(3)*

1. During the Apprenticeship, the Apprentice shall receive work experience and job related education in all phases of the occupation, including safe work practices, necessary to develop the skill and proficiency of a skilled professional.
2. The program sponsor or its designated apprenticeship committee must ensure Apprentices are rotated throughout the various work processes to ensure a well-rounded professional upon completion of the Apprenticeship, and identify what methodology will be used to track progression of experience on-the-job.
3. Such on-the-job training shall be carried on under the direction and guidance of a qualified professional.

The following identifies the major work processes in which Apprentices will be trained.

Apprenticeship Competencies – Technical

The below on-the-job-learning (OJL) work process competencies are intended as a guide. It need not be followed in any particular sequence, and it is understood that some adjustments may be necessary in the hours allotted for different work experience. In all cases, the apprentice is to receive sufficient experience to make them fully competent and use good workmanship in all work processes, which are a part of the trade. In addition, the apprentice shall be fully instructed in safety and OSHA requirements.

Ratings are:

Demonstrates Fundamentals – Apprentice can perform the task with some coaching.

Proficient in Task – Apprentice performs task properly and consistently.

Completion Date – Date apprentice completes final demonstration of competency.

Apprentices need to be "proficient in task" in each category, by each of their nine month reviews during the apprenticeship in order to be considered for any merit increases or to have successfully completed the apprenticeship. **The evaluation will be conducted in accordance with the employer's competency-based performance evaluation system.**

Apprenticeship

Apprentice Name: _____

		Place a check mark in the box when complete.			
	Gas Metal Arc Welding – 0.035" diameter electrode	Field Training	Demonstrates Fundamentals	Proficient in Task	Completion Date
1.	Weld a 3/16" (0.2") [5 mm] horizontal fillet weld in T joint in the horizontal position in a straight line				
2.	Weld a 5/16" (0.3") [8 mm] horizontal fillet weld in Lap joint in the horizontal position in a straight line				
3.	Weld square groove butt joint in the flat position				
4.	Weld flare bevel groove T joint in the flat and horizontal positions				
5.	Weld a 3/16" (0.2") [5 mm] horizontal fillet weld in T joint in the horizontal position around a small diameter pipe				
6.	Weld a 5/16" (0.3") [8 mm] horizontal fillet weld in T joint in the horizontal position around a small diameter pipe				
	Gas Metal Arc Welding – 0.045" diameter electrode	Field Training	Demonstrates Fundamentals	Proficient in Task	Completion Date
7.	Weld a 5/16" (0.3") [8 mm] horizontal fillet weld in T joint in the horizontal position in a straight line				
8.	Weld a 3/8" (0.4") [10 mm] horizontal fillet weld in T joint in the horizontal position in a straight line (2 pass)				
9.	Weld a 1/2" (0.5") [13 mm] horizontal fillet weld in T joint in the horizontal position in a straight line (3 pass)				
10.	Weld a 5/16" (0.3") [8 mm] horizontal fillet weld in T joint in the horizontal position around a small diameter pipe				
11.	Weld bevel (single, Vee, flair) groove welds in the flat position				
	Hoist and Rigging	Field Training	Demonstrates Fundamentals	Proficient in Task	Completion Date
12.	Safety procedures				
13.	Use of straps, cables, chains				
14.	Use of lifting devices				
15.	Estimation of load weights and center of gravity				
16.	Moving, loading, and manipulation of loads				
	Jigs and Fixtures	Field Training	Demonstrates Fundamentals	Proficient in Task	Completion Date
17.	Verify shape of metal parts according to blueprints				
18.	Assemble metal parts in jigs and fixtures				
19.	Tack parts together				
	Safety	Field Training	Demonstrates Fundamentals	Proficient in Task	Completion Date
20.	Safety procedures and practices				
	Lean Manufacturing	Field Training	Demonstrates Fundamentals	Proficient in Task	Completion Date
21.	Principles of 5S				
22.	Weld to takt time				
23.	Kaizen event participation				
	Weld Inspection	Field	Demonstrates	Proficient in	Completion Date

		Training	Fundamentals	Task	
24.	Visual examination of surfaces prior to welding				
25.	Visual examination of welds for acceptance				
	Weld Layout and Fabrication	Field Training	Demonstrates Fundamentals	Proficient in Task	Completion Date
26.	Layout and fixture weldments using layout table or without fixtures				
27.					
28.					

Date Completed: _____

Apprentice:_____

Mentor:_____

Supervisor:_____

Pella Academy:_____

Apprenticeship Competencies – Behavioral

In addition to mastering all of the essential technical competencies, an apprentice must consistently demonstrate at an acceptable level the following behavioral competencies in order to complete the apprenticeship.

Ratings are:
(4) Exceeds targets; (3) Consistently achieves targets; (2) Meets some targets;
(1) Not meeting targets; or (N/A) Not applicable.

Apprentices need to receive at least a "3" ranking in each category, by each of their nine month reviews during the apprenticeship in order to be considered for any merit increases or to have successfully completed the apprenticeship. **The evaluation will be conducted in accordance with the employer's competency-based performance evaluation system.**

Apprentice Name: _____

Ranking

Item #	**Behavioral Competencies**	**4**	**3**	**2**	**1**	**N/A**
1.	Participation in team discussions/meetings					
2.	Focus in team discussions/meetings					
3.	Focus during independent work					
4.	Openness to new ideas and change					
5.	Ability to deal with ambiguity by exploring, asking questions, etc.					
6.	Knows when to ask for help					
7.	Able to demonstrate effective group presentation skills					
8.	Able to demonstrate effective one-on-one communication skills					
9.	Maintains an acceptable attendance record					
10.	Reports to work on time					
11.	Completes assigned tasks on time					
12.	Uses appropriate language					
13.	Demonstrates respect for customers, co-workers and supervisors					
14.	Demonstrates trust, honesty and integrity					
15.	Requests and performs work assignments without prompting					
16.	Appropriately cares for personal dress, grooming and hygiene					
17.	Maintains a positive attitude					
18.	Cooperates with and assists co-workers					
19.	Follows instructions/directions					
20.	Able to work under supervision					
21.	Able to accept constructive feedback and criticism					
22.	Able to follow safety rules					
23.	Able to take care of equipment and work place					
24.	Able to keep work area neat and clean					
25.	Able to meet supervisor's work standards					
26.	Able to not let personal life interfere with work					
27.	Adheres to work policies/rules/regulations					

Date Completed: _____ **Supervisor/Trainer:** _____

Section 2 – Minimum Qualifications for Apprenticeship *29 CFR § 29.5(b)(1)*

Applicants shall meet the following minimum qualifications:

1. **Age**: Shall be at least 16 years of age.
2. **Education**: Can only enter registered apprenticeship in the junior year. Currently enrolled in Welding classes at Career Academy of Pella or previously enrolled.
3. **Physical**/**Mental**: Shall be physically capable of performing the essential functions of the occupation without endangering the health and safety of themselves and/or fellow workers. Applicants shall be allowed to request reasonable accommodation for a disability to meet this standard when applicable.
4. **Other:** Applicants will be drug free and agree to submit to random drug testing.
5. **Other:** Shall have parental consent if below the age of 18.

Section 3 – Term of Apprenticeship *29 CFR § 29.5(b)(2)*

1. The term of Apprenticeship shall be a period of reasonably continuous employment, including the probationary period as stated on this "Trade Schedule" attached to and made a part of these Standards; plus the required hours per year of related education.
2. The program is premised on competencies demonstrated in lieu of time considerations. However, Title 29, CFR Part 29 requires that time considerations be addressed in the Standards.
3. The term of apprenticeship shall be no less than 2000 hours of reasonably continuous employment and training on the job, supplemented by the required minimum 144 hours of job related education.
4. An Apprentice, who, by exceptional aptitude or as a result of past education and/or practical experience, achieves the desired level of competency in a phase of the Apprenticeship Program in less than the time designated or illustrates existing competency on the initial assessment, may be advanced to the appropriate level.

Section 4 – Probationary Period **29 CFR §§ 29.5(b)(8) and 29.5(b)(20)**

1. The first 500 hours as a registered apprentice shall be considered a Probationary Period if the apprentice is a new hire, as consistent with Career Academy of Pella policy.
2. During the probationary period either the apprentice or the Sponsor may terminate the Apprenticeship Agreement, without stated cause, by notifying the other party in writing. The records for each probationary apprentice will be reviewed prior to the end of the probationary period. Records may consist of periodic reports regarding progression made in both the OJL and related instruction, and any disciplinary action taken during the probationary period.
3. Any probationary apprentice evaluated as satisfactory after a review of the probationary period will be given full credit for the probationary period and continue in the program.
4. After the probationary period the Apprenticeship Agreement may be canceled at the request of the apprentice, or may be suspended or canceled by the Sponsor for reasonable cause after documented due notice to the apprentice and a reasonable opportunity for corrective action. In such cases, the Sponsor will provide written notice to the apprentice and to the Registration Agency of the final action taken.

Section 5 – Apprentice to Professional Ratio *29 CFR § 29.5(b)(7)*

1. A numeric ratio of apprentices to fully skilled professionals in the occupation consistent with proper supervision, training, safety, and continuity of employment except where such ratios are expressly prohibited by collective bargaining agreements. The ratio language must be specific and clearly described as to its application to the job site, employer's total workforce, department, or plant.
2. The ratio of apprentices employed (on the job site, department, plant, or employer's total workforce) to fully skilled professionals will be 1:1.

Section 6 – Apprentice Wage Progression *29 CFR § 29.5(b)(5)*

1. Apprentices shall be paid a progressively increasing schedule of wages for each hour spent on the job during their apprenticeship based on the acquisition of increased skill and competence as the training progresses.
2. Before an apprentice is advanced to the next segment of training or to fully proficient professional, the sponsor will evaluate all progress to determine whether advancement has been earned by satisfactory performance in OJL and in job related education courses. In determining whether satisfactory progress has been made, the sponsor will be guided by the work

experience and job related education records and reports.

3. At no time will the starting wage rate be less than that required by any minimum wage law which may be legally applicable.
4. To qualify for the next level the apprentice must have completed the necessary on-the-job learning (OJL) hours and the related education component, as listed on the *On-the-Job Learning and Job Related Education Training* outline related to this occupation.

Level	Minimum Starting Wage	On-the-Job Learning Benchmark	Education Benchmark
1	$12.00	With supervision, begin field training and become familiar with all required competencies	Complete a minimum of 144 hours of job related education with satisfactory progress
2	$15.00	With little or no supervision, demonstrate proficiency in all required tasks.	Attend required continuing education offerings

The current minimum Wage Rate for an employee at the full performance level will be no less than for this occupation which is $17.50 per hour.

Note: Participating Employers will annotate wages on the Company Participation Agreement.

Section 7 – Apprenticeship Instructor Qualifications *29 CFR § 29.5(b)(4 (i) (ii)*

Every Apprenticeship Instructor shall:

1. Meet the State Dept. of Education's requirements for a vocational technical instructor in the State of Registration.

OR

2. Be a subject matter expert which is defined as an individual who is recognized within an industry as having expertise in a specific occupation.

AND

3. Have training in teaching techniques and adult learning styles, which may occur before or after the apprenticeship instructor has started to provide the Job Related Education (JRE).

Section 8- Job Related Education *29 CFR § 29.5(b)(4)*

Provider(s): Career Academy of Pella
Address: 210 E. University Street
Pella, IA 50219

Method: Classroom

1. During the term of apprenticeship, each Apprentice is required to complete approximately 450 hours of related education..
2. Each Apprentice's attendance and progress in related education must be tracked and appropriate records maintained.
3. Time devoted to the job related education shall not be considered as part of the on-the-job learning (OJL).
4. Failure on the part of the Apprentice to fulfill their obligation as to the related education and/or attendance, or their failure to maintain passing grades therein, shall constitute adequate cause for cancellation of their Apprenticeship Agreement.
5. Job Related Education courses supplement the on-the-job learning and lists courses that provide technical ability.
6. The sponsor will secure competent instructors whose knowledge, experience, and ability to teach will be carefully examined and monitored.
7. The sponsor will secure the instructional aids and equipment it deems necessary to provide quality instruction.
8. Each Apprentice's attendance and progress in related education must be tracked and appropriate records maintained.
9. Any apprentice who is absent from related instruction will satisfactorily complete all coursework missed before being advanced to the next period of training. In cases of failure of an apprentice to fulfill the obligations regarding related

instruction without due cause, the sponsor will take appropriate disciplinary action and may terminate the apprenticeship agreement after due notice to the apprentice and opportunity for corrective action.

10. To the extent possible, related instruction will be closely correlated with the practical experience and training received on the job. The sponsor will monitor and document the apprentice's progress in related instruction classes.
11. Time devoted to the job related education shall not be considered as part of the on-the-job learning (OJL).
12. Failure on the part of the Apprentice to fulfill their obligation as to the related education and/or attendance, or their failure to maintain passing grades therein, shall constitute adequate cause for cancellation of their Apprenticeship Agreement.
13. Apprentices "will not" be paid for hours spent attending related instruction classes.
14. The sponsor will inform each apprentice of the availability of college credit through the Registered Apprenticeship College Consortium (RACC).

The course listings outline the related education that supplements the on-the-job learning. It is through the combination of both the on-the-job learning and the related education that the apprentice can reach the skilled level of the occupation. The following is the required course curriculum during the term of apprenticeship.

Related Training and Instruction
Shielded Metal Arc Welding – Basic
MATH (PELLA-CORE MATH 1, 2, 3 OR MATH 1, 2, 3)
Arrange, add, subtract, multiply and divide whole numbers
Solve practical problems using addition, subtraction, multiplication and division of whole numbers
Solve practical problems involving fractions
Solve problems using operations with decimal fractions
Analyze problems to determine whether they are direct or inverse proportions, set up proportions and solve for unknowns
Solve more complex percentage problems in which two of the three parts are not directly given
Solve practical applied problems involving tolerances and limits (customary and metric)
Solve practical applied customary length, area, volume, capacity and weight problems
Solve practical applied metric length, , area, volume, capacity and weight problems
Solve formulas by substituting numbers for letters, word statements and diagram values
Compute areas of more complex figures that consist of two or more common polygons
Read and interpret data from given vertical and horizontal bar graphs
Draw and label vertical and horizontal bar graphs using given data
Read and interpret data from given circle graphs
Read and interpret data from given broken-line, straight-line and curved-line graphs
LANGUAGE ARTS (PELLA-COMMUNICATIONS SKILLS*)
Prepare and deliver an informative speech
Give and accept constructive criticism
Identify strategies for different types of conflict
Define the term nonverbal communication and explain how it differs in each of the three cultural levels: technical, formal and informal
Create a resume appropriate for a high school student going to the next steps of their life
Define the term small group and list the uses and values of small group communication in an effective organization
Actively participate in small group, problem-solution process and present the results to an audience
Summarize the communication skills needed by effective team members in a leadership position and why these skills are so important
Identify the leader's responsibilities during a team meeting
Formulate a message while writing a business letter

Demonstrate proficiency in a job interview
FINANCIAL LITERACY (PELLA-FINANCIAL LITERACY OR LIFE MANAGEMENT
Explain the three basic reasons for saving money
Develop a plan for spending and saving that has both long-term and short-term components
Evaluate investment alternatives: money markets, bonds, single stocks, mutual funds, annuities and real estate
Identify the costs of using various credit
Understand that integrity and honesty are important when it comes to negotiating with others
Analyze the components of an employer benefits package
Differentiate between term and cash life insurance
Describe factors affecting take-home pay
HEALTH-CPR-PELLA-HEALTH)
CPR Certification
Identify situations that cause stress
Identify stress management techniques
List ways you can personally conserve resources or reduce pollution
Describe how the skills of communication, cooperation and compromise are essential for healthy relationships
Identify what is and is not sexual harassment
APPRENTICESHIP SPECIFIC SKIILLS
CAD-PELLA – METAL DESIGN AND MARKETING
Execute safe work practices using course equipment
Demonstrate general shop safety
Differentiate when to use CAD and CAM
Compose complex shapes using CAD
Drawing basic shapes using CAD
INDUSTRIAL TECHNOLOGY – PELLA – POWER TOOLS*
Use correctly and safely all hand tools (screwdrivers, chisels, mallets, files, rasps, pliers, clamps, vices and layout tools)
Use correctly and safely all power tools (Planer, Jointer, Table Saw, Miter, Saw/Compound Miter Saw, Band Saw, Drill Press, Router, Sanding Equipment, Cordless Tools-Drill and Impact Driver
Measure accurately to a 16th of an inch
Identify proper measuring instrument for the task
Use proper hand and power tools during assembly
Work as a team to help others assemble projects correctly when more hands are needed
WELDING SKILLS – (MUST BE DONE IN PELLA – ADVANCED WELDING*)
First Semester Competencies (List)
Safety and Related Instruction
Gas Metal Arc Welding (Short Circuit)
Blueprint Reading for Welders and Fitters
Second Semester Competencies (List)
Gas Metal Arc Welding – GMAW (Spray Transfer)
Shielded Metal Arc Welding
Flux Cored Arc Welding
Introduction to Fabrication
Pass AWS Certification at the completion of the Welding 1 & 2

Related Training and Instruction

SAFETY AND RELATED INSTRUCTION-39 HOURS
Safety Procedures and Practices
Job Safety Analysis Tests
Safety Videos ● Electric Shock ● Fumes and Gases ● Fire and Explosions ● MSDS - Material Safety Data Sheets ● PPE - Personal Protective Equipment ● Cutting Safety
Utilize all Welding Safety in All Classes

GAS METAL ARC WELDING – GMAW (SHORT CIRCUIT) 60 HOURS
Introduction to Gas Metal Arc Welding
Safety and Health of Welders and Implement in class
Installation, Setup and Maintenance of Equipment
Seven Essentials of Welding
Quality of Welds - Discontinuities
Shielding Gases
Distortion Control
Surfacing Welds - Flat Position
Fillet Gauges
Fillet Weld - T-joint & Lap - Horizontal Position (2F)
Fillet Weld - T-joint Vertical Up (3F)
Fillet Weld - T-joint Overhead (4F)
Triple Pass Weld - Horizontal Position (2F)
Square Groove Weld - Flat Position (1G)
Square Groove Weld - Horizontal (2G)
Square Groove Weld - Vertical (3G)
Square Groove Weld - Overhead (4G)
Single V-Groove Weld - Flat position (1G)
Fillet Weld Around 1” to 2” Circle
Weld Parts to Blueprint

GAS METAL ARC WELDING - GMAW (SPRAY TRANSFER) 20 HOURs
Introduction to Gas Metal Arc Welding
Safety and Health of Welders and Implement in class
Installation, Setup and Maintenance of Equipment
Quality of Welds - Discontinuities
Shielding Gases
Surfacing Welds - Flat Position
Fillet Weld - T-joint & Lap - Horizontal Position (2F)
Fillet Weld - T-joint Vertical (3F)
Fillet Weld - T-joint Overhead (4F)
Triple Pass Weld - All Positions
Square Groove Weld - Flat Position (1G)
Square Groove Weld - Horizontal (2G)
Square Groove Weld - Vertical (3G)
Square Groove Weld - Overhead (4G)
Single V-Groove Weld - Flat position (1G)
Fillet Weld Around 1” to 2” Circle
Macro Etch Test
Practice Session for AWS V Groove Certification 1G-L or UL
Weld Parts to Blueprint

SHIELDED METAL ARC WELDING - SMAW 20 HOURS
Introduction to Shielded Metal Arc Welding
Safety and Health of Welders and Implement in class
Installation, Setup and Maintenance of Equipment
The Five Essentials
Striking and Controlling the Arc
Power Sources
Quality of Welds - Discontinuities
Electrode Selection
Surfacing Welds - Flat Position (E6010 and E7018)
Fillet Weld - T-joint & Lap - Horizontal Position (2F)

Fillet Weld - T-joint Vertical (3F)
Fillet Weld - T-joint Overhead (4F)
Triple Pass Weld - All Positions
Square Groove Weld - Flat Position (1G)

FLUX CORED ARC WELDING - FCAW 20 HOURS
Introduction to Flux Cored Arc Welding
Safety and Health of Welders and Implement in class
Installation, Setup and Maintenance of Equipment
Quality of Welds - Discontinuities
Fillet Weld - T-joint Horizontal Position (2F)
Fillet Weld - T-joint Vertical Position (3F)
Fillet Weld - T-joint Overhead Position (4F)
Triple Pass Weld - Horizontal Position (2F)
Square Groove Weld - Flat Position (1G)

BLUEPRINT READING FOR WELDERS AND FITTERS 45 HOURS
Welding Symbols
Review of Mathematics : Fraction/Decimals/Conversions
Metrics and Conversions
Orthographic Views
Standard Drawing Lines and Symbols
Interpreting Blueprint Information
Surface and Center Line Relationships
Auxiliary Views
Scale Drawings
Dimensional Tolerance and Stock Allowance
Setup Tools
Setup Applications
Blueprint Magnet Tests

INTRO TO FABRICATION 60 HOURS
Teach safe use and how to operate all listed below

• Bandsaw • Plasma Cutter • Oxy-Acetylene Cutting and Heating • Iron Worker • Drill Press • Punch Press • Grinder
Review and discuss ASTM
Measuring Tools • Calipers • Micrometer • Tape Measure
Basic Lay-out • Combination Square and Scribe • Angle Protractor • Produce Weldment from Blueprint
Layout Parts in a Fixture

Apprenticeship

Workplace Requirements				
	Summer	Semester 1	Semester 2	Post Secondary
Following 11th Grade	Full time employee for approximately 8 weeks of 40 hours per week on the worksite for approximately 320 hours			
DMACC Course & Credits	MFG 818 - 5 Credits			
12th Grade		Part time employee approximately 20 hours per week on the worksite for approximately 360 hours	Part time employee approximately 20 hours per week on the worksite for approximately 360 hours	
DMACC Courses & Credits		SDV 221/226 - 6 Credits	SDV 221/225 - 5 Credits	
Post Secondary				Full time employee for approximately for approximately one year
DMACC Courses & Credits				SDV 212/223 - 3 Credits MFG 510 - 3 Credits WEL 341- 6 Credits WEl 342- 6 Credits

** Completion of the Apprenticeship = 34 DMACC Credits*

Pella Community Schools Pursuing Excellence

PLTW

Apprenticeship

CAP GATEWAY OF OPPORTUNITIES CAREER ACADEMY of Pella

Timeline Overview

Grade 9 and 10

Semester 1	Semester 2
Academic and vocational coursework	Academic and vocational coursework

Grade 11

Semester 1		Semester 2			
Academic course work and Welding 1		Academic course work and Welding 2			
Business Involvement in Blue	December	Jan./Feb.	April	May	May
	Career Academy interview to assess interest	Job Shadow	Employer Interview	Apprenticeship registration and signing day	DMACC Certification

Summer after Grade 11

June and July
Eight Weeks of full time employment as a summer apprentice

Grade 12

Semester 1	Semester 2
Three periods of academic courses and four hours per day as a school year apprentice	Three periods of academic courses andFour hours per day as a school year apprentice

One year after Graduation

June - May	May
40 hours per week as a full time apprentice	Apprenticeship Certification

Business Participation Timeline
(Starting in the student's junior year)

Month	Step	Duration
December / January	Interview conducted by Career Academy of Pella staff to verify interest and identify potential placements	One hour per student
February	Business interview day(s) where students will rotate through interviews with businesses who are potential apprenticeship placements	1-2 days during welding class periods
March	Conduct a job shadow with student(s) at his or her most likely business placement	4 hours
April	Official student registration for apprenticeship with signing ceremony	1 hour
May	Pre-employment screening and offer letter from business	2 weeks
June-July	Onboarding, employment and mentoring in the summer phase of the apprenticeship	8 weeks
Late August-May of Senior year	Four hours per day of employment and mentoring in the school-year phase of the apprenticeship	36 weeks
June to May following graduation	Full time employment and mentoring during the after high school phase of the apprenticeship	1 year
June after completion of full year of employment	- Documentation completion of all academic and work related competencies by CAP - Submission of all materials to department of labor by CAP - Awarding of certified apprentice status by the Department of Labor	1 month

DMACC Associate of General Studies Degree

# of Credits	Course
15	Welding 1 and Welding 2
6	Welding 1 (Electives) * *Welding 1 = 6 DMACC Credits (WEL 228 - 1 Credit, WEL 233 - 3 Credits, WEL 244 - 2 Credits)*
8	Welding 2 (Electives)**8 DMACC Credits (WEL 245 - 2 Credits, WEL 208 - 2 Credits, WEL 236 - 2 Credits, WEL 238 - 2 Credits)*
14	Total Welding 1 & 2 Credits
	Completion of Apprenticeship (Electives)
5	MFG 818 - 5 Credits (Summer between junior and senior years)
6	SDV 212/226 - 6 Credits (Fall senior year) SDV 212 - 1 Credit, SDV 226 - 5 Credits
5	SDV 212/225 - 5 Credits (Spring senior year) SDV 212 - 1 Credit, SDV 225 - 4 Credits
18	SDV 212 - 1 Credit, SDV 223 - 2 Credits, MFG 510 - 3 Credits, WEL 341- 6 Credits, WEL 342- 6 Credits (Post Graduation)
34	Total On-The-Job Credits
	Pella High School Course
1	Power Tools (Electives)
3	Communication Skills (Communications)
3	Intro to Psychology (Social and Behavioral Sciences/Humanities)
4	Statistics or DMACC online course (Math/Science)
3	Distributed Requirement (IED, Oral Communication, Elementary Spanish 1)
Minimum 2	2 Elective Credits
Minimum 16	Total DMACC Credits through Pella HIgh School
64 Credits	DMACC AGS Credits Needed

Associate in General Studies Requirements at DMACC

To receive an AGS degree, students must:

A. Maintain a 2.0 grade point average on all work applicable to the AGS degree.
B. Earn at DMACC a minimum of 1/3 of the semester credit hours applicable to the degree being pursued. No more than 43 transfer semester credit hours may be applied toward the degree.
C. Complete no more than 8 semester credit hours of Independent Study courses; no more than 4 credits of Independent Study may be earned in a single semester.
D. Complete a minimum of 12 semester credit hours at DMACC after the AGS program approval effective date of January 1, 1992. E. Satisfy the following AGS Degree Requirements:
    - Communications **3 credits**
    - Social & Behavioral Sciences **3 credits**
    - Math & Sciences **3 credits**
    - Distributed Requirements **4 credits**
    - Plus Electives **51 credits**

For more information about the Associate in General Studies (AGS) Degree, please visit our website at https://www.dmacc.edu/programs/pages/programinformation.aspx.

Welding Apprenticeship Course Path

9th Grade (A minimum of 7 classes required per semester)		
	Semester 1	Semester 2
Required Core Academic Skill Courses	Core Math 1 or Math 1 English 9 or English 9 Honors Physical Science American History or *American History AP**	Core Math 1 or Math 1 English 9 or English 9 Honors Physical Science American History or *American History AP**
Required Electives	PE	
Required Electives for Apprenticeships		
Suggested Electives	Exploring Industrial Technology Spanish 1 Robotics 1	Fundamentals of Construction Spanish 1

** American History AP = 3 College Credits with an AP test score of 3 or higher*

Welding Apprenticeship Course Path

10th Grade (A minimum of 7 classes required per semester)		
	Semester 1	Semester 2
Required Core Academic Skill Courses	Core Math 2 or Math 2 English 10 or English 10 Honors Chemistry World Geography or *Human Geography AP**	Core Math 2 or Math 2 English 10 or English 10 Honors Chemistry World Geography or *Human Geography AP**
Required Electives	PE	
Required Electives for Apprenticeships	Metal Design & Marketing	Health/CPR
Suggested Electives	Spanish 2 Robotics 2	Spanish 2 Fundamentals of Welding

** Human Geography AP = 3 College Credits with an AP test score of 3 or higher*

Welding Apprenticeship Course Path

11th Grade (A minimum of 6 classes required per semester)		
	Semester 1	Semester 2
Required Core Academic Skill Courses	Core Math 3 or Math 3 English 11 or *College American Literature to 1865** Biology World History or *Western Civilizations 1**	Core Math 3 or Math 3 English 11 or *College American Literature since 1865** Biology World History or *Western Civilizations 2**
Required Electives	PE	
Required Electives for Apprenticeships	*Welding 1* - (2 High School Credits)*	*Welding 2* - (2 High School Credits)* *Care of/Use of Hand/Power Tools**
Suggested Electives	Psychology Introduction to Engineering & Design	*Introduction to Psychology** Introduction to Engineering & Design

** College American Literature = 3 Credits 1st semester & 3 Credits 2nd semester = 6 William Penn Credits (ENGL238 - 3 Credits, ENGL239 - 3 Credits)*

** Western Civilizations = 4 Credits 1st semester & 4 Credits 2nd semester = 8 DMACC Credits (HIS112 - 4 Credits, HIS114 - 4 Credits)*

** Welding 1 = 6 DMACC Credits (WEL 228 - 1 Credit, WEL 233 - 3 Credits, WEL 244 - 2 Credits)*

** Welding 2 = 8 DMACC Credits (WEL 245 - 2 Credits, WEL 208 - 2 Credits, WEL 236 - 2 Credits, WEL 238 - 2 Credits)*

** Introduction to Psychology = 3 DMACC Credits (PSY111 - 3 Credits)*

** Care of/Use of Hand/Power Tools = 1 DMACC Credit (CON336 - 1 Credit)*

Welding Apprenticeship Course Path

12th Grade (A minimum of 6 classes required per semester)		
	Semester 1	Semester 2
Required Core Academic Skill Courses	*Communication Skills**	American Government *or American Government AP**
Required Electives	PE	
Required Electives for Apprenticeships		Financial Literacy
Suggested Electives	Business Principles & Ownership *Statistics**	*Oral Communication**
Workplace Training	*Metal Work-Workplace Experience** *(3 High School Credits)*	*Metal Work-Workplace Experience** *(3 High School Credits)*

** Communication Skills = 3 DMACC Credits (COM703 - 3 Credits)*
** American Government AP = 3 College Credits with an AP test score of 3 or higher*
** Statistics = 4 DMACC Credits (MAT157 - 4 Credits)*
** Oral Communication = 3 DMACC Credits (SPC101 - 3 Credits)*
** SDV 212/226- SDV 212 = 1 Credit, SDV 226 =5 Credits (Fall senior year Apprenticeship)*
** SDV 221/225 - SDV 212 = 1 Credit, SDV 225 = 4 Credits (Spring senior year Apprenticeship)*

Employer Participation Agreement

WELDER, Combination (Advanced Manufacturing)

The undersigned employer hereby subscribes to the provisions of the Apprenticeship Standards formulated and approved by The Career Academy of Pella Apprenticeship Program. The Employer agrees to carry out the intent and purpose of these apprenticeship standards and to abide by the rules and decisions of The Career Academy of Pella Apprenticeship Program under these Apprenticeship Standards. The Employer affirms they have been furnished a true copy of the Standards and have read and understood them and do hereby request certification to train apprentices under the provisions of these Standards, with all attendant rights and benefits thereof, until cancelled voluntarily or revoked by the Career Academy of Pella Apprenticeship Program Apprenticeship Program or the Registration Agency. On-the-job, the apprentice is hereby guaranteed assignment to a skilled and competent Journey worker /mentor and is guaranteed that the work assigned to the apprentice will be rotated so as to ensure training in all phases of the work of this occupation. This form must be signed and returned to The Career Academy of Pella and placed on file in order for the Employer's apprentice(s) to be registered as part of the National Apprenticeship system.

Employer Name and Title_____

Federal Tax ID Number (if applicable):_____

Address:_____

City/State/Zip Code:_____

Phone Number:_____Email:_____

Journeyworker/Mentor Wage (Apprentice Completion Wage) $_____

Signature _____Date:_____

Reviewed and Approved by:

Career Academy of Pella

Signature _____Date:_____

Title:_____

All Employer Participation Agreement will be uploaded in RAPID's 2.0 by the Sponsor

ETA-671 APPRENTICESHIP AGREEMENT

This Page Intentionally Left Blank

Pella Community Schools Pursuing Excellence

PROJECT LEAD THE WAY PLTW

Apprenticeship

Program Registration and Apprenticeship Agreement
Office of Apprenticeship

U.S. Department of Labor

Employment and Training Administration

APPRENTICE REGISTRATION – SECTION II OMB No. 1205-0223 Expires:

Warning: This agreement does not constitute a certification under Title 29, CFR, Part 5 for the employment of the apprentice on Federally financed or assisted construction projects. Current certifications must be obtained from the Office of Apprenticeship (OA) or the recognized State Apprenticeship Agency shown below. (Item 24)

The program sponsor and apprentice agree to the terms of the Apprenticeship Standards incorporated as part of this Agreement. The sponsor will not discriminate in the selection and training of the apprentice in accordance with the Equal Opportunity Standards in Title 29 CFR Part 30, and Executive Order 11246. This agreement may be terminated by either of the parties, citing cause(s), with notification to the registration agency, in compliance with Title 29, CFR, Part 29

PART A: TO BE COMPLETED BY APPRENTICE. NOTE TO SPONSOR: PART A SHOULD ONLY BE FILLED OUT BY APPRENTICE.

1. Name (Last, First, Middle) and Address *Social Security Number

- -

(No., Street, City, State, Zip Code, Telephone Number)

2. Date of Birth (Mo., Day, Yr.)

3. Sex (Mark one)
☐ Male ☐ Female

Answer Both A and B (Voluntary)
(Definitions on reverse)

4. a. Ethnic Group (Mark one)
☐ Hispanic or Latino
☐ Not Hispanic or Latino

b. Race (Mark one or more)
☐ American Indian or Alaska native
☐ Asian
☐ Black or African American
☐ Native Hawaiian or other Pacific Islander
☐ White

5. Veteran Status (Mark one)
☐ Non-Veteran
☐ Veteran

6. Education Level (Mark one)
☐ 8th grade or less
☐ 9th to 12th grade
☐ GED
☐ High School Graduate or Greater
☐ Post Secondary or Technical Training

7a. Employment Status (Mark one) ☐ New Employee ☐ Existing Employee

7b. Career Connection (Mark one) (Instructions on reverse) ☐ None ☐ Pre-Apprenticeship ☐ Technical Training School ☐ Military Veterans
☐ Job Corps ☐ Youth Build ☐ HUD/STEP-UP ☐ Career Center Referral ☐ School-to-Registered Apprenticeship

8. Signature of Apprentice Date

9. Signature of Parent/Guardian (if minor) Date

PART B: SPONSOR: EXCEPT FOR ITEMS 6, 7, 8, 10a. - 10c, REMAINDER OF ITEMS REPOPULATED FROM PROGRAM REGISTRATION.

1. Sponsor Program No.

Sponsor Name and Address (No. Street, City, County, State, Zip Code)

2a Occupation (The work processes listed in the standards are part of this agreement).

2b Occupation Code:

2b.1. Interim Credentials Only applicable to Part B, 3.b. and 3.c. (Mark one)
☐ Yes ☐ No

3. Occupation Training Approach (Mark one)
3a. ☐ Time-Based
3b. ☐ Competency-Based
3c. ☐ Hybrid

4. Term (Hrs., Mos., Yrs.)

5. Probationary Period (Hrs., Mos., Yrs.)

6. Credit for Previous Experience (Hrs., Mos., Yrs.)

7. Term Remaining (Hrs., Mos., Yrs.)

8. Date Apprenticeship Begins

9a. Related Instruction (Number of Hours Per Year)

9b. Apprentice Wages for Related Instruction
☐ Will Be Paid ☐ Will Not Be Paid

9c. Related Training Instruction Source
Associated Locksmiths of America,
Penn Foster

10. Wages: (Instructions on reverse)

10a. Pre-Apprenticeship Hourly Wage $ _____ 10b. Apprentice's Entry Hourly Wage $_____ 10c. Journeyworker's Hourly Wage $_____

Check Box	Period 1	2	3	4	5	6	7	8	9	10
10d. Term ☐ Hrs., ☐ Mos., or ☐ Yrs.										
10e. Wage Rate (Mark one) % ☐ or $ ☐										

11. Signature of Sponsor's Representative(s) Date Signed

13. Name and Address of Sponsor Designee to Receive Complaints (If applicable)

12. Signature of Sponsor's Representative(s)	Date Signed	**CONTACT PHONE:** **CONTACT FAX:** **CONTACT EMAIL:**

PART C: TO BE COMPLETED BY REGISTRATION AGENCY		
1. Registration Agency and Address	2. Signature (Registration Agency)	3. Date Registered

4. Apprentice Identification Number (Definition on reverse):

Program Definitions and/or Instructions:

Part A

Item 4.a. Definition - Ethnic Group:

Hispanic or Latino. A person of Cuban, Mexican, Puerto Rican, South or Central American, or other Spanish culture or origin, regardless of race. The term, "Spanish origin," can be used in addition to "Hispanic or Latino."

Item 4.b. Definitions - Race:

American Indian or Alaska Native. A person having origins in any of the original peoples of North and South America (including Central America), and who maintains tribal affiliation or community attachment.

Asian. A person having origins in any of the original peoples of the Far East, Southeast Asia, or the Indian subcontinent including, for example, Cambodia, China, India, Japan, Korea, Malaysia, Pakistan, the Philippine Islands, Thailand, and Vietnam.

Black or African American. A person having origins in any of the black racial groups of Africa. Terms such as "Haitian" or "Negro" can be used in addition to "Black or African American."

Native Hawaiian or Other Pacific Islander. A person having origins in any of the original peoples of Hawaii, Guam, Samoa, or other Pacific Islands.

White. A person having origins in any of the original peoples of Europe, the Middle East, or North Africa.

Item 7b. Instructions:

Indicate any career connection (definitions follow). Enter "None" if no career connection applies.

Pre-Apprenticeship. A program or set of strategies designed to prepare individuals to enter and succeed in a Registered Apprenticeship program which has or have a documented partnership(s) with a Registered Apprenticeship program(s).

Technical Training School. Graduates trained in an occupation from a technical training school related to an occupation registered by the program sponsor and who meet the minimum qualifications for Registered Apprenticeship.

Military Veterans. Veterans that completed a military technical training school and/or elect to participate in the Building and Construction Trades Helmets to Hardhats Program or trained in an occupation while in the military related to an occupation
registered by the program sponsor and who meet the minimum qualifications for Registered Apprenticeship.

Job Corps. Graduates trained in an occupation from a federally funded Job Corps center related to an occupation registered
by the program sponsor and who meet the minimum qualifications for Registered Apprenticeship.

Youth-Build. Graduates trained in an occupation from a federally funded Youth-Build program related to an occupation registered by the sponsor and who meet the minimum qualifications for Registered Apprenticeship.

HUD/STEP-UP. Applicants who successfully participated in the U.S. Department of Housing and Urban Development Step-Up program and received an apprenticeship experience which meets the minimum qualifications for Registered Apprenticeship.

Career Center Referral. Includes career center participants referred to the Registered Apprenticeship Program and/or apprentice(s) that receive workforce system funded services that support their participation in a Registered Apprenticeship program. This may include the use of individual training accounts and/or on-the-job training reimbursements.

School-to-Registered Apprenticeship. Program designed to allow high school youth ages 16 - 17 to enter a Registered Apprenticeship program and continue after graduation with full credit given for the high school portion.

Part B

Item 2.b.1. Interim Credentials. Based on program standards that utilize the competency-based or hybrid training approach, and, upon request of the program sponsor, the credentials are issued as certificates by the Registration Agency. Interim credentials provide certification of competency attainment by an apprentice.

Item 3. Occupation Training Approach. The program sponsor decides which of the three training methods to use in the program as follows:

3.a. Time-Based Training Approach - apprentice required to complete a specific number of hours of on-the-job learning (OJL) and related training instruction (RTI).

3.b. Competency-Based Training Approach - apprentice required to demonstrate competency in defined subject areas and does not require any specific hours of OJL or RTI; or

3.c. Hybrid-Training Approach - apprentice required to complete a minimum number of OJL and RTI hours and demonstrate competency in the defined subject areas.

Item 4. Term (Hrs., Mos., Yrs.). Based on the program sponsor's training approach. See Part B, Item 4. Available in the terms of the Apprenticeship Standards.

Item 5. Probationary Period (Hrs. Mos., Yrs.) Probation period cannot exceed 25 percent of the length of the program or one year, whichever is shorter.

Item 7. Term Remaining (Hrs., Mos., Yrs.). Under Part B, Item 6., Credit for Previous Experience (Hrs., Mos., Yrs.) is determined by the program sponsor. The Term Remaining (Hrs., Mos., Yrs.) in Part B, Item 7., for the apprentice to complete the apprenticeship is based on the training approach indicated in Part B, Item 3. The term remaining is available in the terms of the Apprenticeship Standards.

Item 10. Wage Instructions:

10a. Pre-Apprentice hourly wage: sponsor enters the individual's hourly wage in the quarter prior to becoming an apprentice.

10b. Apprentice's entry hourly wage (hourly dollar amount paid): sponsor enters this apprentice's entry hourly wage.

10c. Journeyworkers wage: sponsor enters wage per hour.

10d. Term: sponsor enters in each box the apprentice schedule of pay for each advancement period based on the program sponsor's training approach. See Part B, Item 3. and is available in the terms of the Apprenticeship Standards.

10e. Percent or dollar amount: sponsor marks one.

Note: *10c. If the employer is signatory to a collective bargaining agreement, the journeyworker's wage rate in the applicable collective bargaining agreement is identified. Apprenticeship program sponsors not covered by a collective bargaining agreement must identify a minimum journeyworker's hourly wage rate that will be the basis for the progressive wage schedule identified in Item 10e,of this agreement.*

10d. The employer agrees to pay the hourly wage rate identified in this section to the apprentice each period of the apprenticeship based on the successful completion of the training approach and related instructions outlined in the Apprenticeship Standards. The period may be expressed in hours, months, or years.

10e. The wage rates are expressed either as a percent or in dollars and cents of the journeyworker's wage depending on the industry.

Example (Time-based approach) - 3 YEAR APPRENTICESHIP PROGRAM

Term	Period 1	Period 2	Period 3	Period 4	Period 5	Period 6
	1000 Hrs.	1000 Hrs.	1000 Hrs.	1000 Hrs.	1000 Hrs.	1000 Hrs.
%	55	60	65	70	80	90

Item 13. Identifies the individual or entity responsible for receiving complaints (Code of Federal Regulations, CFR, Title 29 part 29.7(k)).

Part C.

Item 4. Definition: The Registered Apprenticeship Partners Information Data System (RAPIDS) encrypts the apprentice's social security number and generates a unique identification number to identify the apprentice. It replaces the social security number to protect the apprentice's privacy.

*The submission of your social security number is requested. The apprentice's social security number will only be used to verify the apprentice's periods of employment and wages for purposes of complying with the Office of Management and Budget related to common measures of the Federal job training and employment programs for measuring performance outcomes and for purposes of the Government Performance and Results Act. The Office of Apprenticeship will use wage records through the Wage Record Interchange System and needs the apprentice's social security number to match this number against the employers' wage records. Also, the apprentice's social security number will be used, if appropriate, for purposes of the Davis Bacon Act of 1931, as amended, U.S. Code Title 40, Sections 276a to 276a-7, and Title 29 CFR 5, to verify and certify to the U.S. Department of Labor, Wage and Hour Division, that you are a registered apprentice to ensure that the employer is complying with the geographic prevailing wage of your occupational classification. Failure to disclose your social security number on this form will not affect your right to be registered as an apprentice. Civil and criminal provisions of the Privacy Act apply to any unlawful disclosure of your social security number, which is prohibited.

The collection and maintenance of the data on ETA-671, Apprentice Registration – Section II Form, is authorized under the National Apprenticeship Act, 29 U.S.C. 50, and CFR 29 Part 29.1. The data is used for apprenticeship program statistical purposes and is maintained, pursuant to the Privacy Act of 1974 (5 U.S.C. 552a.), in a system of records entitled, DOL/ETA-4, Registered Apprenticeship Partners Information Management Data System (RAPIDS) at the U.S. Department of Labor, Office of Apprenticeship,. Data may be disclosed to a State Apprenticeship Agency to determine an assessment of skill needs and program information, and in connection with federal litigation or when required by law.

Persons are not required to respond to this collection of information unless it displays a currently valid OMB control number. Public reporting burden for this collection of information is estimated to average five minutes per response, including the time for reviewing instructions, searching existing data sources, gathering and maintaining the data needed, and completing and reviewing the collection of information. The obligation to respond is required to obtain or retain benefits under 29 USC 50. Send comments regarding this burden or any other aspect of this collection of information including suggestions for reducing this burden to the U.S. Department of Labor, Office of Apprenticeship, 200 Constitution Avenue, N.W., Room N-5311, Washington, D.C. 20210 (Paperwork Reduction Project 1205-0023.)

Career Academy of Pella Registered Apprenticeship Brochure

A marketing tool for students, parents, schools and employers

THE FUTURE

INCREASE...

Available labor force

Opportunities for businesses to thrive and expand

Opportunities for people to live and work in Iowa

Economic development

CAP
GATEWAY OF OPPORTUNITIES
CAREER ACADEMY of Pella

410 East 8th Street
Pella, IA 50219

(641) 628-3731

FUTURE READY IOWA

GREATNESS STEMS FROM IOWANS

Design compliments of Vermeer

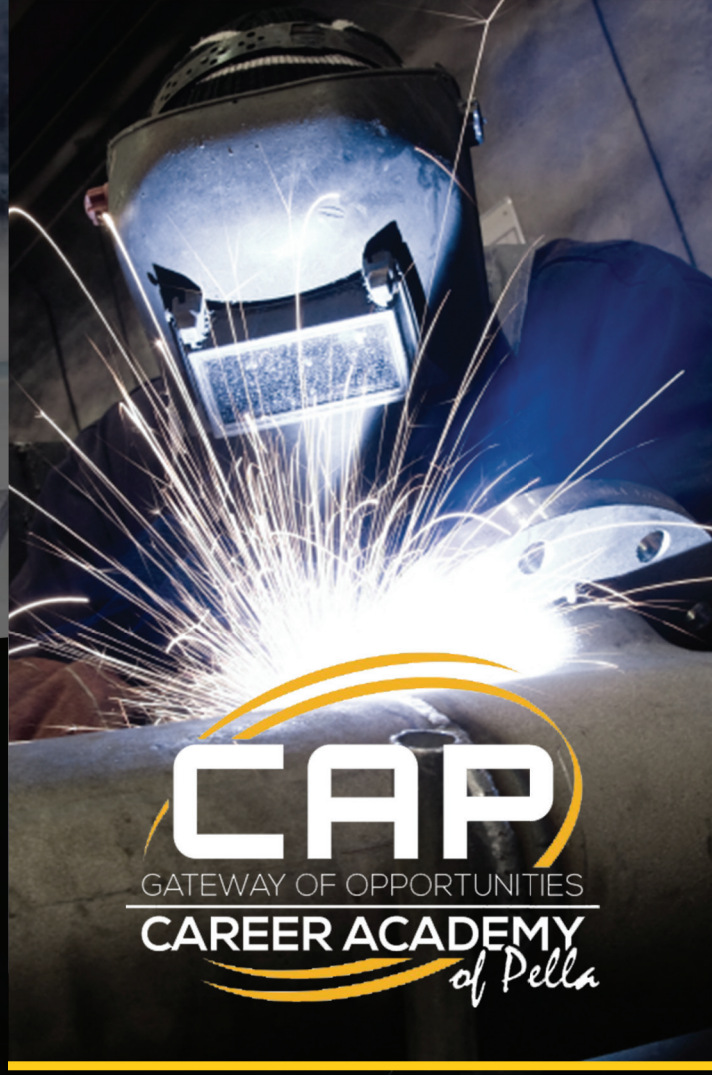

CAP
GATEWAY OF OPPORTUNITIES
CAREER ACADEMY of Pella

WELDING REGISTERED APPRENTICE PROGRAM

Sponsored by:
Pella Community Schools

In Partnership with
Iowa Schools and Businesses

THE PROBLEM

Over the next decade, 3-½ million manufacturing jobs need to be filled.

The skills gap is expected to result in two million of those jobs going unfilled.*

**"The skills gap in US manufacturing 2015 and beyond," Deloitte and Manufacturing Institute*

THE SOLUTION

Career Academy of Pella recognizes that a practical and cost effective method of preparing students for superior performances in skilled occupations is through a planned registered apprenticeship.

This program provides for skills training within the employment setting, supervised by experienced professionals.

The apprentice's knowledge and understanding of the occupation, through practical experience, is enhanced through participation in job-related technical education.

WELDING APPRENTICESHIP TIMELINE

Freshman and sophomore year- The student will take core and elective courses.

Junior year- The student will take core and apprentice training courses.

The summer following junior year- Initial employment and training begins. The student will work approximately 40 hours a week for eight weeks.

Senior year- The student spends half the day in the classroom taking core and elective courses, and half the day working for an employer.

Post graduation- The student works full-time for approximately one year for an employer.

DEGREE AND CERTIFICATES AWARDED

High School Diploma

National Career Readiness Certification

American Welding Society Certification

Apprenticeship Certificate

Associate of General Studies Degree (optional)

Career Readiness/Employment

FUTURE OPPORTUNITIES IN APPRENTICESHIP

Engineering Technician

Certified Nursing Assistant

Culinary Arts

Acknowledgements

We would like to extend our sincere appreciation to everyone who has so generously contributed time, effort and support toward developing this Registered Apprenticeship model and playbook. Thank you to Governor Reynolds and Lt. Governor Gregg for being such strong proponents of apprenticeships, business-education partnerships and developing Iowa's workforce in so many ways. Thank you to the Iowa Governor's STEM Advisory Council and its leadership and staff for bringing so many stakeholders together to make this apprenticeship model possible. Thank you to Greer Sisson and her team with the U.S. Department of Labor for their determination toward building a model that serves both businesses and students alike, and Director Beth Townsend and Iowa Workforce Development and Future Ready Iowa Alliance leaders for making this apprenticeship model development a priority. Thank you to President Rob Denson and the team at Des Moines Area Community College for making work-based learning an avenue toward a degree, as well as those with the Department of Education for supporting these unique learning experiences.

Locally, we thank Mary Andringa and Vermeer Corporation, and Greg Ebeling and the Career Academy of Pella, for putting the necessary people resources toward this first-of-its-kind registered apprenticeship model, and for all the regional businesses and school systems who have been walking alongside us throughout its development. Most of all, we thank the students and their parents who are embracing the registered apprenticeship opportunity, dedicating themselves to a unique learning experience, and committing to businesses and communities in our great State of Iowa.

Vermeer and Career Academy of Pella Registered Apprenticeship Development Team

Teri Vos, Dave Landon, Eric Nelson, Lowell Ernst, Sheila Graham