2007 MISSOURI

Minimum Standards for School Buses

School Governance Section

Missouri Department of Elementary and Secondary Education

D. Kent King, Commissioner of Education

The Department of Elementary and Secondary Education does not discriminate on the basis of race, color, national origin, sex, disability, or age in its programs and activities. Inquiries related to Department programs may be directed to the Jefferson State Office Building, Title IX Coordinator, 5th Floor, 205 Jefferson Street, Jefferson City, MO 65102-0480; telephone number 573-751-4212.

DESE 3660-6 Rev 8/06

Foreword i

Section 1 – General Provisions
Effective Date 1
Scope 1
Federal Motor Vehicle Safety Standards 1
Used School Buses 1
Changes in Specifications 1
Study of New Equipment 1

Section 2 – School Bus Types
Types A, B, C and D School Buses 3

Section 3 – Bus Chassis Specifications
Air Cleaner 4
Axles 4
Brakes 4
Bumper, Front 5
Certification 6
Clutch 7
Color 7
Drive Shaft 7
Electrical System 7
Engine Fire Extinguisher 9
Exhaust System 9
Fenders (Front Type C Vehicles) 10
Frame 10
Fuel System 11
Governor 11
Heating System, Provision For 11
Horn 12
Instruments and Instrument Panel 12
Oil Filter 13
Openings 13
Passenger Load 13
Retarder System (Optional Equipment) 14
Road Speed Control 14
Shock Absorbers 14
Steering Gear 14
Suspension Systems 14
Throttle 15
Tires and Rims 15
Transmission 15
Turning Radius 16
Undercoating 16

Section 4 – Bus Body Specifications
Aisle 17
Back-Up Warning Alarm 17
Battery 17
Bumper, Front 17
Bumper, Rear 18
Ceiling 18
Certification 18
Chains, Tire 18
Child Safety Alarm (Optional) 18
Color 19
Construction 19
Crossing Control Arm 19
Defrosters 20
Doors 21
Emergency Exits 22
Emergency Equipment 25
Fire Suppression Systems (Optional) 26
Floors 26
Handrails 27
Heating and Air Conditioning Systems 27
Hinges 30
Identification 31
Inside Height 32
Insulation 32
Interior 32
Lamps and Signals 33
Metal Treatment 35
Mirrors 36
Mounting 36
Overall Length 37
Overall Width 37
Post Trip Safety Alarm (Optional) 37
Public Address System 37
Retroreflective Material 37
Rub Rails 38
Seat and Restraining Barriers 39
Side Skirts 41
Steering Wheels 41
Steps 41
Step Treads 41
Stirrup Steps 42
Stop-Signal Arm 42
Storage Compartment (Optional) 42
Sun Shield 42
Tailpipe 43
Towing Attachment Points 43
Traction Assisting Devices (Optional) 43
Trash Container and Holding Device 44
Undercoating 44
Ventilation 45
Wheelhousing 45
Windows 46
Windshield Washers 46
Windshield Wipers 46
Wiring 46

Section 5 – Specifications for Specially Equipped School Buses
Introduction 49
Definition 49
General Requirements 50
Aisles 50
Glazing 50
Identification 50
Passenger Capacity Rating 50
Power Lifts and Ramps 51
Regular Service Entrance 54
Restraining Devices 54
Seating Arrangements 54
Securement and Restraint System for Wheelchairs and Wheelchair-Seated Occupants 54
Special Light 56
Special Service Entrance 56
Special Service Entrance Doors 57
Support Equipment and Accessories 58
Technology and Equipment, New 59

Appendices
School Bus Chassis and Body 60
National School Bus Yellow 60
Bus Body Heating System Test 60
Noise Test Procedure 71
Retroreflective Sheeting/Daytime Color 72
Seat Upholstery Fire Block Test 72
2007 Missouri Minimum Standards for School Buses Committee 77

FOREWORD

The revised minimum standards for school bus chassis and school bus bodies have been prepared in conformity with the Revised Statutes of Missouri (RSMo) for school bus transportation. The standards recommended by the 2005 National Conference on School Transportation and the Federal Motor Vehicle Safety Standards (FMVSS) promulgated by the U. S. Department of Transportation were used as guides in developing these Missouri standards.

The minimum standards appearing herein have been officially adopted by the State Board of Education in compliance with RSMo Section 304.060, which reads in part:

> "…The state board of education shall adopt and enforce regulations not inconsistent with law to cover the design and operation of all school buses used for the transportation of school children when owned and operated by any school district or privately owned and operated under contract with any school district in this state, and such regulations shall by reference be made a part of any such contract with a school district…Every school district, its officers and employees, and every person employed under contract by a school district shall be subject to such regulations…"

The standards herein adopted shall be considered minimum. The writing of specifications and the purchase of equipment may exceed the adopted minimum standards in safety and quality. The standards are adopted to provide statewide minimum standards consistent with safety and economy and to eliminate the manufacture of unsafe school buses. It is believed that these standards are sufficiently flexible to permit opportunity for the use of new inventions and improvements that will ensure greater efficiency and safety.

This manual is divided into five sections: Section 1 – General Provisions, Section 2 – School Bus Types, Section 3 – Bus Chassis Specifications, Section 4 – Bus Body Specifications and Section 5 – Specifications for Specially Equipped School Buses.

SECTION 1 – GENERAL PROVISIONS

EFFECTIVE DATE

These specifications apply to school buses with a body tag ”build date” later than June 30, 2007.

SCOPE

The specifications contained herein shall apply to all school buses manufactured after the effective date and used to transport Missouri public school students to or from school or any place for educational purposes.

FEDERAL MOTOR VEHICLE SAFETY STANDARDS

All motor vehicles with a passenger capacity of more than 10, including the driver, used to transport school students are required to meet the Federal Motor Vehicle Safety Standards (FMVSS) school bus specifications.

All school buses shall be equipped as required by the minimum specifications contained herein and as required by applicable FMVSS. In the event of a conflict between the requirements of an applicable FMVSS as referred to in this section and the minimum specifications contained in this regulation, the requirements of the FMVSS shall control.

USED SCHOOL BUSES

A used school bus purchased for use in Missouri by or for a public school district shall meet all of the legal requirements of the Missouri Revised Statutes for motor vehicles, and it shall meet the Missouri Minimum Standards for School Buses that were in effect on the date the vehicle was manufactured plus any changes made on a retroactive basis.

CHANGES IN SPECIFICATIONS

Any part of these specifications may be changed at any time by addenda adopted by the State Board of Education.

STUDY OF NEW EQUIPMENT

The Missouri Department of Elementary and Secondary Education retains authority for the director of School Governance to authorize testing of new equipment on school buses. A written request to test new equipment must be submitted to the director of School Governance for approval prior to the installation or use of the new equipment. The request shall specify a period of time for the test not to exceed one school year. After receiving a written request, the director of School Governance will analyze the need for the new equipment and the related safety issues involved and will issue a written decision within 15 working days to the

individual making the request. Upon completion of the test, a written report by the authorized tester shall be submitted to the director of School Governance for analysis. If the equipment test provides additional safety for students, an addendum to these standards may be issued by the Department.

SECTION 2 – SCHOOL BUS TYPES

Type A: A Type A school bus is a conversion bus constructed utilizing a cutaway front section vehicle with a left side driver's door. This definition includes two classifications: Type A-1, with a Gross Vehicle Weight Rating (GVWR) of 14,500 pounds or less; and Type A-2, with a GVWR greater than 14,500 pounds and less than or equal to 21,500 pounds.

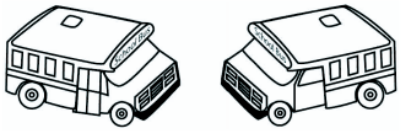

Type A-1

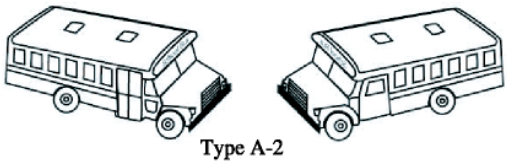

Type A-2

Type B: A Type B school bus is constructed utilizing a stripped chassis. The entrance door is behind the front wheels. This definition includes two classifications: Type B-1, with a GVWR of 10,000 pounds or less, and Type B-2, with a GVWR greater than 10,000 pounds.

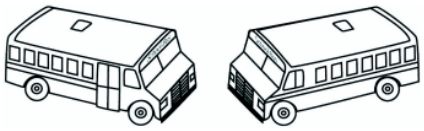

Type B

Type C: A Type C school bus is constructed utilizing a chassis with a hood and front fender assembly. The entrance door is behind the front wheels—also known as a conventional style school bus.This type also includes the cutaway truck chassis or truck chassis with cab with or without a left side door and with a GVWR greater than 21,500 pounds.

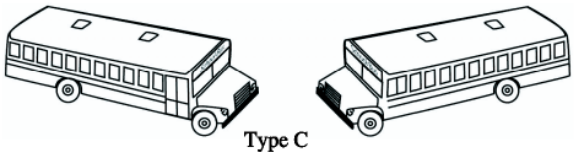

Type C
Conventional

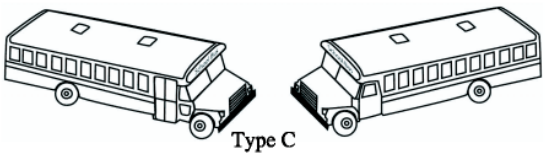

Type C
Cutaway

Type D: A Type D school bus is constructed utilizing a stripped chassis. The entrance door is ahead of the front wheels—also known as a rear engine or front engine transit style school bus.

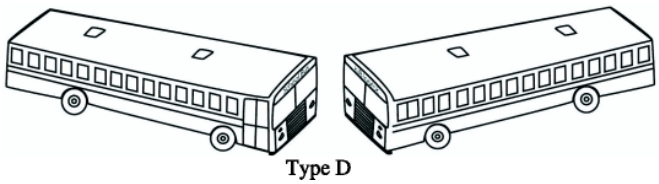

Type D

SECTION 3 – BUS CHASSIS SPECIFICATIONS

AIR CLEANER

A. A dry element air cleaner shall be provided.

B. All diesel engine air filters shall include a latch-type restriction indicator that retains the maximum restriction developed during operation of the engine. The indicator should include a reset control so that it can be returned to zero when desired.

AXLES

The front and rear axle and suspension systems shall have a gross axle weight rating (GAWR) at ground commensurate with the respective front and rear weight loads of the bus loaded to its rated passenger capacity.

BRAKES (GENERAL)

A. The chassis brake system shall conform to the provisions of FMVSS No. 105, *Hydraulic and Electric Brake Systems*; No. 106, *Brake Hoses*; and No. 121, *Air Brake Systems,* as applicable.

B. The anti-lock brake system (ABS) provided in accordance with FMVSS No. 105, *Hydraulic and Electric Brake Systems*, or No. 121, *Air Brake Systems,* shall provide wheel speed sensors for each front wheel and for each wheel on at least one rear axle. The system shall provide anti-lock braking performance for each wheel equipped with sensors (four-channel system).

C. All brake systems shall be designed to permit visual inspection of brake-lining wear without the removal of any chassis component(s).

D. The brake lines, booster-assist lines and control cables shall be protected from excessive heat, vibration and corrosion. They shall be installed in a manner that prevents chafing.

E. The parking-brake system for either air or hydraulic service brake systems may be of a power-assisted design. The power parking-brake actuator should be a device located on the instrument panel within reach of a seated a fifth-percentile female driver. As an option, the parking brake may be set by placing the automatic transmission shift-control mechanism in the park position.

F. The power-operated parking-brake system may be interlocked to the engine key switch. Once the parking brake has been set and the ignition switch has been turned to the off position, the parking brake

cannot be released until the key switch is turned back to the on position.

BRAKES (HYDRAULIC)

Buses using a hydraulic-assist brake shall be equipped with audible and visible warning signals, which provide a continuous warning to the driver indicating a loss of fluid flow from the primary source or the failure of the backup pump system.

BRAKES (AIR)

A. The air-pressure supply system shall include a desiccant-type air dryer installed according to the manufacturer's recommendations. The air-pressure storage-tank system may incorporate an automatic drain valve.

B. The chassis manufacturer shall provide an accessory outlet for air-operated systems installed by the body manufacturer. This outlet shall include a pressure protection valve to prevent a loss of air pressure in the service brake reservoir.

C. For air-brake systems, an air-pressure gauge capable of complying with commercial driver's license (CDL) pre-trip inspection requirements shall be provided in the instrument panel.

D. Air-brake-equipped buses may be outfitted with a service-brake interlock. If equipped with a service-brake interlock, the parking brake cannot be released until the brake pedal is depressed.

E. Air-brake systems shall include a system for anti-compounding of the service brakes and parking brakes.

F. Air brakes shall have both visible and audible warning devices that alert the driver when air pressure falls below the level at which warnings are required under FMVSS No. 121, *Air Brake Systems.*

BUMPER (FRONT)

A. School buses shall be equipped with front bumpers. The front bumper shall be furnished by the chassis manufacturer for all school bus types unless there is a specific alternate agreement between the chassis manufacturer and body manufacturer.

B. The front bumpers on buses of Type A-2 (with a GVWR greater than 14,500 pounds), Type B, Type C and Type D shall be equivalent in strength and durability to a pressed steel channel at least 3/16 of an inch thick and not less than 8 inches wide (high). It shall extend beyond the forward-most part of the body, grille, hood and fenders; and

it shall extend to the outer edges of the fenders at the bumper's top line.

Type A buses with a GVWR of 14,500 pounds or less may be equipped with an OEM-supplied front bumper. The front bumper shall be of sufficient strength to permit being pushed by another vehicle on a smooth surface with a 5 degree (8.7 percent) grade without permanent distortion. The contact point on the front bumper is intended to be between the frame rails with as wide a contact area as possible. If the front bumper is used for lifting, the contact points shall be under the bumper attachments to the frame rail brackets unless the manufacturer specifies different lifting points in the owner's manual. Contact and lifting pressures should be applied simultaneously at both lifting points.

C. Except for breakaway bumper ends, the front bumper shall be of sufficient strength to permit pushing a vehicle of equal gross vehicle weight, per Section B, without permanent distortion to the bumper, chassis or body.

D. Tow eyes or hooks shall be furnished and attached so that they do not project beyond the front bumper. Tow eyes or hooks attached to the chassis frame shall be furnished by the chassis manufacturer. This installation shall be in accordance with the chassis manufacturer's specifications. Tow eyes or hooks shall have an individual strength rating of 13,500 pounds each and a combined rating of 27,000 pounds. For pulling and lifting purposes, tow hooks are meant to be used simultaneously. For pulling, angularity applied to the tow hooks will decrease their capacity.

Note: Type A buses are exempt from this requirement for front tow hooks or eyes due to built-in crush zones. Rear tow eyes or hooks are addressed in Section 4, Towing Attachment Points.

E. The bumper shall be designed or reinforced so it will not deform when the bus is lifted by a chain passed under the bumper (or through the bumper if holes are provided for this purpose) and attached to both tow eyes or hooks. For the purpose of meeting this specification, the bus shall be empty and positioned on a level, hard surface; and both tow eyes or hooks shall share the load equally.

CERTIFICATION

The chassis manufacturer shall certify that its product meets the state's minimum standards on items not covered by the FMVSS certification requirements of 49 CFR, Part 567, by mailing a certification statement to: Director of School Governance, Missouri Department of Elementary and Secondary Education, P.O. Box 480, Jefferson City, MO 65102.

CLUTCH

A. Clutch torque capacity shall be equal to or greater than the engine torque output.

B. A starter interlock shall be installed to prevent actuation of the starter if the clutch pedal is not depressed.

COLOR

A. The chassis, including the wheels and the front bumper, shall be black. The body, cowl, hood and fenders shall be in National School Bus Yellow (NSBY). The flat top surface of the hood may be non-reflective black or NSBY. (See Appendices, School Bus Chassis and Body.)

B. If used, demountable rims may be silver, gray, white, yellow or black (as received from the wheel manufacturer).

DRIVE SHAFT

The drive shaft shall be protected by a metal guard (or guards) around the circumference to reduce the possibility of the drive shaft whipping through the floor or dropping to the ground if broken.

ELECTRICAL SYSTEM

A. Battery

1. The storage batteries shall have a minimum cold-cranking capacity rating (cold-cranking amps) equal to the cranking current required for 30 seconds at 0 degrees Fahrenheit, and a minimum reserve capacity rating of 120 minutes at 25 amps. Higher capacities may be required depending upon optional equipment and local environmental conditions.

2. Since all batteries are to be secured in a sliding tray in the body, chassis manufacturers shall mount the battery temporarily on the chassis frame, An exception is that van conversion or cutaway front-section chassis may be secured in accordance with the manufacturer's standard configuration. In these cases, the final location of the battery and the appropriate cable lengths shall be agreed upon mutually by the chassis manufacturer and body manufacturer. However, in all cases the battery cable provided with the chassis shall have sufficient length to allow some slack and shall be of a sufficient gauge to carry the required amperage.

B. Alternator

1. All Type A-2 and Type B buses with a GVWR of 15,000 pounds or less shall have minimum 130-amp alternators.

2. Type A-2 and Type B buses over 15,000 pounds GVWR and all Type C and Type D buses shall be equipped with heavy-duty truck or bus-type alternators meeting SAE J180, *Electrical Charging Systems for Construction and Industrial Machinery*. These alternators shall have a minimum output rating of 130 amps or higher and should produce a minimum current output of 50 percent of the rating at engine idle speed.

3. Buses equipped with electrically powered wheelchair lifts, air conditioning or other accessories may be equipped with a device that monitors the electrical-system voltage and advances the engine idle speed when the voltage drops to, or below, a preset level.

4. A belt-driven alternator shall be capable of handling its rated capacity with no detrimental effects on any other driven components. (For estimating required alternator capacity, see School Bus Manufacturers Technical Council's publication, "School Bus Technical Reference," available at http://www.nasdpts.org.)

5. A direct-drive alternator is permissible in lieu of a belt-driven alternator.

C. Electrical Components

Materials in all electrical components shall contain no mercury.

D. Wiring

1. All wiring shall conform to the current applicable and recommended practices of the Society of Automotive Engineers (SAE). All wiring shall use color and at least one other method for identification. The other method shall be either a number code or name code, and each chassis shall be delivered with a diagram that illustrates the wiring of the chassis.

2. The chassis manufacturer of an incomplete vehicle shall install a readily accessible terminal strip or connector on the body side of the cowl, or in an accessible location in the engine compartment of vehicles designed without a cowl. The strip or connector shall contain the following terminals for the body connections:

a. Main 100-amp body circuit

b. Tail lamps

c. Right-turn signal

d. Left-turn signal

e. Stop lamps

f. Back-up lamps

g. Instrument-panel lamps (rheostat controlled by headlamp switch)

E. Circuits

1. An appropriate identifying diagram (in color with a name or number code) for all chassis electrical circuits shall be provided by the body manufacturer for distribution to the end user.

2. Wiring for the headlamp system must be separate from the electronic-controlled body solenoid/module.

F. Daytime Running Lamps (DRL)

A DRL system shall be provided.

ENGINE FIRE EXTINGUISHER

The chassis manufacturer may provide an automatic fire-extinguisher system in the engine compartment.

EXHAUST SYSTEM

A. The exhaust pipe, muffler and tailpipe shall be outside the bus body compartment and shall be attached to the chassis so that other chassis components are not damaged.

B. The tailpipe shall be constructed of a corrosion-resistant tubing material at least equal in strength and durability to 16-gauge steel tubing of equal diameter.

C. Chassis manufacturers shall furnish an exhaust system with a tailpipe of sufficient length to exit at the rear of the bus or at the left side of the bus body no more than 18 inches forward of the front edge of the rear wheelhouse opening. If designed to exit at the rear of the bus, the tailpipe shall extend at least 5 inches beyond the end of the chassis frame. If designed to exit at the side of the bus, the tailpipe shall extend

at least 48.5 inches (51.5 inches if the body is 102 inches wide) outboard from the chassis centerline.

1. On Types C and D vehicles, the tailpipe shall not exit beneath a fuel fill or emergency-door exit.

2. Types A and B chassis may be furnished with the manufacturer's standard tailpipe configuration. (See also Section 4, Tailpipe.)

D. The exhaust system on a chassis shall be adequately insulated from the fuel system.

E. The muffler shall be constructed using corrosion-resistant material.

FENDERS (FRONT-TYPE C VEHICLES)

A. The total spread of the outer edges of front fenders, measured at the fender line, shall exceed the total spread of the front tires when the front wheels are in a straight-ahead position.

B. The front fender shall be properly braced and shall not require attachment to any part of the body.

FRAME

A. Frame length shall be established in accordance with the design criteria for the complete vehicle.

B. Making holes in top or bottom flanges or side units of the frame and welding to the frame shall not be permitted except as provided or accepted by the chassis manufacturer.

C. The frame shall not be modified for the purpose of extending the wheel base.

D. Any secondary manufacturer that modifies the original chassis frame shall provide a warranty at least equal to the warranty offered by the original equipment manufacturer (OEM). The secondary manufacturer shall certify that the modification and other parts or equipment affected by the modification shall be free from defects in material and workmanship under the normal use and service intended by the OEM.

FUEL SYSTEM

A. Fuel tank(s) having a minimum 30-gallon capacity shall be provided by the chassis manufacturer. Each tank shall be filled from and vented to the outside of the passenger compartment, and each fuel filler should be placed in a location where accidental fuel spillage will not drip or drain on any part of the exhaust system.

B. The fuel system shall comply with FMVSS No. 301, *Fuel System Integrity.*

C. Fuel tank(s) may be mounted between the chassis frame rails or outboard of the frame rails on either the left or right side of the vehicle.

D. The actual draw capacity of each fuel tank shall be a minimum of 83 percent of tank capacity.

E. Installation of alternative fuel systems, including fuel tanks and piping from the tank to the engine, shall comply with all applicable fire codes in effect on the date of manufacture of the bus.

F. Installation of liquefied petroleum gas (LPG) tanks shall comply with National Fire Protection Association (NFPA) 58, *Liquefied Petroleum Gas Code.*

G. Installation of compressed natural gas (CNG) containers shall comply with FMVSS No. 304, *Compressed Natural Gas Fuel Container Integrity.*

H. The CNG fuel system shall comply with FMVSS No. 303, *Fuel System Integrity of Compressed Natural Gas Vehicles.*

GOVERNOR

An electronic engine-speed limiter shall be provided and set to limit engine speed, not to exceed the maximum revolutions per minute as recommended by the engine manufacturer.

HEATING SYSTEM, PROVISION FOR

The chassis engine shall have plugged openings for the purpose of supplying hot water for the bus heating system. The openings shall be suitable for attaching 3/4-inch pipe thread/hose connectors. The engine shall be capable of supplying coolant at a temperature of at least 170 degrees Fahrenheit at the engine coolant thermostat opening temperature. The coolant flow rate shall be 50 pounds per minute at the return end of 30 feet of automotive hot water heater hose with a 1-inch inside diameter. (See SBMTC-001, *Standard Code for Testing and Rating Automotive Bus Hot Water Heating and Ventilating Equipment.)*

HORN

The bus shall be equipped with a horn(s) of standard make capable of producing a complex sound in bands of audio frequencies between 250 and 2,000 cycles per second and tested in accordance with SAE J377, *Horn – Forward Warning – Electric – Performance, Test, and Application.*

INSTRUMENTS AND INSTRUMENT PANEL

A. The chassis shall be equipped with the instruments and gauges listed below: (Telltale warning lamps in lieu of gauges are not acceptable except as noted)

1. Speedometer

2. Odometer – The odometer will give accrued mileage to seven digits, including tenths of miles unless tenths of miles are registered on a trip odometer. The odometer should be able to be read without using a key.

3. Tachometer **(Note:** For Types B, C and D buses, a tachometer shall be installed so as to be visible to the driver while he or she is seated in a normal driving position.)

4. Voltmeter **(Note:** An ammeter with graduated charge and discharge indicators is permitted in lieu of a voltmeter. When used, the ammeter wiring must be compatible with the current flow of the system.)

5. Oil-pressure gauge

6. Water-temperature gauge

7. Fuel gauge

8. Upper beam headlamp indicator

9. Brake air-pressure gauge (air brakes), brake indicator lamp (vacuum/hydraulic brakes) or brake indicator lamp (hydraulic/hydraulic)

10. Turn-signal indicator

11. Glow-plug indicator lamp (where appropriate)

B. All instruments shall be easily accessible for maintenance and repair.

C. The instruments and gauges shall be mounted on the instrument panel so that each is clearly visible to the driver while he or she is seated in a normal driving position.

D. Instruments and controls must be illuminated as required by FMVSS No. 101, *Controls and Displays.*

E. Multi-function gauge (MFG)

1. The driver must be able to manually select any displayable function of the gauge on an MFG whenever desired.

2. Whenever an out-of-limits condition that would be displayed on one or more functions of an MFG occurs, the MFG controller should automatically display this condition on the instrument cluster. This should be in the form of an illuminated telltale warning lamp, as well as having the MFG automatically display the out-of-limits indications. If two or more functions displayed on the MFG go out of limits simultaneously, then the MFG should sequence automatically between those functions continuously until the condition is corrected.

3. The use of an MFG does not relieve the need for audible warning devices where required.

OIL FILTER

An oil filter with a replaceable element shall be provided and connected by flexible oil lines if it is not a built-in or an engine-mounted design. The oil filter shall have a capacity in accordance with the engine manufacturer's recommendation.

OPENINGS

All openings in the floorboard or firewall between the chassis and the passenger compartment (e.g., for gearshift selector and parking-brakes lever) shall be sealed.

PASSENGER LOAD

A. Actual gross vehicle weight (GVW) is the sum of the chassis weight plus the body weight, plus the driver's weight, plus total seated student weight. For the purposes of calculation, the driver's weight is 150 pounds and the student weight is 120 pounds per student.

B. The actual GVW shall not exceed the chassis manufacturer's GVWR for the chassis, nor shall the actual weight carried on any axle

exceed the chassis manufacturer's Gross Axle Weight Rating (GAWR).

RETARDER SYSTEM (OPTIONAL EQUIPMENT)

If used, a retarder system shall limit the speed of a fully loaded school bus to 19.0 mph on a 7 percent grade for 3.6 miles.

ROAD SPEED CONTROL

When it is desired to accurately control vehicle maximum speed, a vehicle speed limiter may be utilized.

SHOCK ABSORBERS

The bus shall be equipped with double-action shock absorbers that are compatible with the manufacturer's rated axle capacity at each wheel location.

STEERING GEAR

A. The steering gear shall be approved by the chassis manufacturer and shall be designed to ensure safe and accurate performance when the vehicle is operated with a maximum load and at maximum speed.

B. If external adjustments are required, the steering mechanism shall be accessible to make such adjustments.

C. Changes shall not be made to the steering apparatus that are not approved by the chassis manufacturer.

D. There shall be a clearance of at least 2 inches between the steering wheel and the cowl, instrument panel, windshield or any other surface.

E. Power steering is required and shall be of the integral type with integral valves.

F. The steering system shall be designed to provide a means for lubrication of all wear-points that are not permanently lubricated.

SUSPENSION SYSTEMS

A. The capacity of springs or suspension assemblies shall be commensurate with the chassis manufacturer's GVWR.

B. Rear-leaf springs shall be of a progressive rate or multi-stage design. Front-leaf springs shall have a stationary eye at one end and shall be protected by a wrapped leaf in addition to the main leaf.

THROTTLE

The force required to operate the throttle shall not exceed 16 pounds throughout the full range of accelerator pedal travel.

TIRES AND RIMS

A. Rims and tires of the proper size and load rating commensurate with the chassis manufacturer's GVWR shall be provided. The use of multi-piece rims and/or tube-type tires shall not be permitted on any school bus with a "build date" after June 30, 1997.

B. Dual rear tires shall be provided on Type A-2, Type B, Type C and Type D school buses.

C. All tires on a vehicle shall be of the same size, and the load range of the tires shall meet or exceed the GVWR as required by FMVSS No. 120, *Tire Selection and Rims for Vehicles other than Passenger Car.*

D. If the vehicle is equipped with a spare-tire and rim assembly, it shall be the same size as what is mounted on the vehicle.

E. If a tire carrier is required, it shall be suitably mounted in an accessible location outside of the passenger compartment.

TRANSMISSION

A. Automatic transmissions shall have no fewer than three forward speeds and one reverse speed. Mechanical shift selectors shall provide a detent between each gear position when the gear-selector quadrant and shift selector are not steering-column mounted.

B. In manual transmissions, second gear and higher shall be synchronized except when incompatible with engine power. A minimum of three forward speeds and one reverse speed shall be provided.

C. A transmission interlock, controlled by application of the service brake, shall be installed to prohibit accidental engagement of the automatic transmission.

TURNING RADIUS

A. A chassis with a wheelbase of 264 inches or less shall have a right and left turning radius of not more than 42.5 feet curb-to-curb measurement.

B. A chassis with a wheelbase of 265 inches or more shall have a right and left turning radius of not more than 44.5 feet curb-to-curb measurement.

UNDERCOATING

The chassis manufacturers, or their agents, shall coat the undersides of steel or metallic-constructed front fenders with a rust-proofing compound, for which the compound manufacturer has issued a notarized certification of compliance to the chassis builder that the compound meets or exceeds all performance and qualitative requirements of paragraph 3.4 of Federal Specification TT-C-520B, *Coating Compound, Bituminous, Solvent Type, Underbody,* using modified tests.

SECTION 4 – BUS BODY SPECIFICATIONS

AISLE

A. All emergency-exit doors shall be accessible by 12-inch minimum aisles. The aisles shall be unobstructed at all times by any type of barrier, seat, wheelchair or tiedown unless a flip seat is installed and occupied. The track of a track-seating system is exempt from this requirement. A flip seat in the unoccupied (up) position shall not obstruct the 12-inch minimum aisle to any side emergency-exit door.

B. The seat backs shall be slanted sufficiently to give aisle clearance of 15 inches at the tops of seat backs.

BACK-UP WARNING ALARM

An automatic audible alarm shall be installed behind the rear axle and shall comply with the published Backup Alarm Standards (SAE J994b) by providing a minimum of 112 dBA; or it shall have a variable volume feature that allows the alarm to vary from 87 dBA to 112 dBA, staying at least 5 dBA above the ambient noise level.

BATTERY

A. The battery is to be furnished by the chassis manufacturer.

B. When the battery is mounted as described in Section 3, the body manufacturer shall securely attach the battery on a slide-out or swing-out tray in a closed, vented compartment in the body skirt so that the battery is accessible for convenient servicing from the outside. The battery-compartment door or cover shall be hinged at the front or top and shall be secured by an adequate and conveniently operated latch or other type fastener. Battery cables installed by the body manufacturer shall meet chassis manufacturer and SAE requirements. Battery cables shall be of sufficient length to allow the battery tray to fully extend. The battery compartment is required on all diesel buses.

C. Buses may be equipped with battery shut-off switches. The switch is to be placed in a location not readily accessible to the driver or passengers.

BUMPER, FRONT

If the chassis manufacturer does not provide a bumper on a Type D school bus, the bumper shall be provided by the body manufacturer. The bumper shall conform to the specifications described in Section 3.

BUMPER, REAR

A. The bumpers on Type A-1 buses shall be a minimum of 8 inches wide (high). Bumpers on Types A-2, B, C and D buses shall be a minimum of 9 and 1/2 inches wide (high). The bumpers shall be of a sufficient strength to permit being pushed by another vehicle of similar size and being lifted by the bumper without permanent distortion.

B. The bumper shall wrap around the back corners of the bus. It shall extend forward at least 12 inches as measured from the rear-most point of the body at the floor line, and it shall be mounted flush with the sides of the body or protected with an end panel.

C. The bumper shall be attached to the chassis frame in such a manner that it may be removed. The bumper shall be braced to resist deformation resulting from impact to the rear or the side. It shall be designed to discourage the hitching of rides by individuals.

D. The bumper shall extend at least 1 inch beyond the rear-most part of the body surface as measured at the floor line.

E. The bottom of the rear bumper shall not be more than 30 inches above ground level.

CEILING

(See Section 4, Insulation and Interior)

CERTIFICATION

The body manufacturer shall, upon the request of the Missouri Department of Elementary and Secondary Education, certify that its product meets the state's minimum standards on items that are not covered by the FMVSS certification requirements of 49 CFR, Part 567, *Certification.*

CHAINS, TIRE

(See Section 4, Wheelhousing)

CHILD SAFETY ALARM (OPTIONAL)

An audible warning alarm or announcement system may be located near the right front corner of the bus and incorporated into the warning-light system to sound as the stop arm and crossing gate open and close. If installed, the system shall be wired to allow red flasher lights to continue flashing until the alarm completes its cycle.

COLOR

A. The school bus body shall be painted National School Bus Yellow (NSBY). (See Appendices, School Bus Chassis and Body.)

B. The body exterior paint trim shall be black.

C. Except for the vertical portion of the front and rear roof caps, the roof of the bus may be painted white. (See an illustration in Appendices, School Bus Chassis and Body – Placement of Retroreflective Markings.)

CONSTRUCTION

A. Side Intrusion Test: The bus body shall be constructed to withstand an intrusion force equal to the curb weight of the vehicle or 20,000 pounds, whichever is less. Each vehicle shall be capable of meeting this requirement when tested in accordance with the procedures set forth below.

The complete body structure, or a representative seven-body-section mock-up with seats installed, shall be load-tested at a location 24 ± 2 inches above the floor line, with a maximum 10-inch diameter cylinder, 48 inches long, mounted in a horizontal plane.

The cylinder shall be placed as close as is practical to the midpoint of the tested structure, spanning two internal vertical structural members. The cylinder shall be statically loaded to the required force of curb weight or 20,000 pounds, whichever is less, in a horizontal plane with the load applied from the exterior toward the interior of the test structure. When the minimum load has been applied, the penetration of the loading cylinder into the passenger compartment shall not exceed 10 inches from the original point of contact. There can be no separation of lapped panels or construction joints. Punctures, tears or breaks in the external panels are acceptable but are not permitted on any adjacent interior panel.

Body companies shall certify compliance with this intrusion requirement and shall include test results as requested.

B. Construction shall be reasonably dustproof and watertight.

CROSSING CONTROL ARM

A. Every school bus that has a gross vehicle weight rating of more than ten thousand pounds, has the engine mounted entirely in front of the windshield, has the entrance door behind the front wheels and is used for the transportation of children in the public school system, shall be equipped with a crossing control arm. The crossing control arm, when activated, shall extend a minimum of 5 feet, 6

inches from the face of the front bumper. The crossing control arm shall be attached to the right side of the front bumper and shall be activated by the same controls that activate the mechanical and electrical signaling devices approved by the State Board of Education. The arm will display a signal plainly visible from the front and rear that indicates a direction to stop. All crossing control arms installed as optional equipment on other types of school buses must comply with the specifications and requirements of this section.

B. The crossing control arm, when opened, shall extend in a line parallel with the body side and shall be positioned on a line with the right side wheels.

C. All components of the crossing control arm and all connections shall be weatherproofed.

D. The crossing control arm shall incorporate system connectors (electrical, vacuum or air) at the gate and shall be easily removable to allow for towing of the bus.

E. The crossing control arm shall meet or exceed SAE J1133.

F. The crossing control arm shall be constructed of noncorrosive or nonferrous material or treated in accordance with the body sheet-metal specification. (See Section 4, Metal Treatment.)

G. There shall be no sharp edges or projections that could cause hazard or injury to students.

H. The crossing control arm shall extend simultaneously with the stop arm(s) by means of the stop arm controls.

I. An automatic recycling interrupt switch should be installed for temporary disabling of the crossing control arm.

DEFROSTERS

A. Defrosting and defogging equipment shall direct a sufficient flow of heated air onto the windshield, the window to the left of the driver and the glass in the viewing area directly to the right of the driver in order to eliminate frost, fog and snow. **(Exception:** The requirements of this standard do not apply to the exterior surfaces of double pane storm windows.)

B. The defrosting system shall conform to SAE J381, *Windshield Defrosting Systems Test Procedure and Performance Requirements—Trucks, Buses, and Multipurpose Vehicles.*

C. The defroster and defogging system shall be capable of furnishing heated, outside ambient air. However, the part of the system furnishing additional air to the windshield, entrance door and stepwell may be the recirculating air type.

D. Auxiliary fans are not considered defrosting or defogging systems.

E. Portable heaters shall not be used.

DOORS

A. The entrance door shall be under the driver's control and shall be designed to afford easy release and provide a positive latching device on manual operating doors that prevent accidental opening. When a hand lever is used, no part shall come together that could shear or crush fingers. Manual door controls shall not require more than 25 pounds of force to operate at any point throughout the range of operation, as tested on a 10-percent grade both uphill and downhill.

B. The entrance door shall be located on the right side of the bus, opposite and within direct view of the driver.

C. The entrance door shall have a minimum horizontal opening of 24 inches and a minimum vertical opening of 68 inches.

D. The entrance door shall be a split-type door and shall open outward.

E. All entrance-door glass shall be approved safety glass. The bottom of each lower glass panel shall be not more than 10 inches from the top surface of the bottom step. The top of each upper glass panel shall be not more than 3 inches from the top of the door.

F. Vertical closing edges on entrance doors shall be equipped with flexible material.

G. All door openings shall be equipped with padding at the top edge. Padding shall be at least 3 inches wide and 1 inch thick, and it shall extend the full width of the door opening.

H. On power-operated entrance doors, the emergency release valve, switch or device to release the entrance door must be placed above or to the immediate left or immediate right of the entrance door and must be clearly labeled.

EMERGENCY EXITS

A. Any installed emergency exit shall comply with the design and performance requirements of FMVSS No. 217, *Bus Emergency Exits and Window Retention and Release,* applicable to that type of exit regardless of whether that exit is required by FMVSS No. 217.

B. Emergency window requirements

1. The rear emergency window shall have a lifting-assistance device that will aid in lifting and holding it open.

2. Side emergency-exit windows, when installed, may be vertically hinged on the forward side of the window. No side emergency-exit window will be located above a stop arm.

C. Emergency door requirements

1. The upper portion of the emergency door shall be equipped with approved safety glazing, the exposed area of which shall be at least 400 square inches. The lower portion of the rear emergency door on Types A-2, B, C and D vehicles shall be equipped with a minimum of 350 square inches of approved safety glazing.

2. There shall be no steps leading to an emergency door except on Types C and D all-wheel-drive buses.

3. Padding shall be affixed to the top edge of each emergency-door opening. Padding shall be at least 3 inches wide and 1 inch thick and shall extend the full width of the door opening.

4. There shall be no obstruction higher than 1/4 inch across the bottom of any emergency-door opening.

5. The words “EMERGENCY DOOR” in letters at least 2 inches high shall be placed at the top of or directly above the emergency door, or on the door in the metal panel above the top glass, both inside and outside the bus.

6. A lock may be placed on the emergency door only if the engine starting and operating system will not function if the emergency door is locked from either inside or outside the bus.

7. In addition to the audible warning required on emergency doors by FMVSS 217, additional emergency exits shall also be equipped with audible warning devices.

D. Emergency-exit requirements: The use of the following tables is to determine the required number and types of emergency exits to comply with this specification based on the bus manufacturer's equipped seating capacity.

1. Use Table 1 if the bus contains a rear emergency door.

2. Use Table 2 if the bus contains a rear pushout emergency window and a left side emergency door, as required by FMVSS No. 217 for school buses without a rear emergency door.

3. When using either Table 1 or Table 2:

   a. Enter the Table at the appropriate capacity and select the desired row from the options for that capacity.

   b. A school bus will meet the requirements of this specification and the requirements of FMVSS 217 if the bus contains the types and quantities of emergency exits listed on the selected row.

TABLE 1
BUSES WITH REAR EMERGENCY DOOR
(All Front Engine Buses)

Available Combinations By Capacity	Manufacturer's Equipped Capacity	Shall Have	And Shall Also Have		
		Roof Hatch	L. Side Emerg. Exit Windows	R. Side Emerg. Exit Windows	L. Side Emerg. Exit Door
1-45	1-45	1	0	0	0
46-70	46-70	2	1	1	0
	46-70	2	0	0	1
71-85	71-85	2	2	2	0
	71-85	2	0	0	1
86-93	86-93	2	2	2	0
	86-93	2	1	1	1

TABLE 2
BUSES WITH REAR PUSHOUT WINDOW AND LEFT SIDE EMERGENCY DOOR
(All Rear Engine Buses)

Available Combinations By Capacity	Manufacturer's Equipped Capacity	Shall Have	And Shall Also Have		
		Roof Hatch	L. Side Emerg. Exit Windows	R. Side Emerg. Exit Windows	L. Side Emerg. Exit Door
1-45	1-45	1	0	0	0
46-82	46-82	2	1	1	0
	46-82	2	0	0	1
83-89	83-39	2	1	1	0
	83-39	2	0	0	1
90-105	90-	2	2	2	0
	90-	2	1	1	1

EMERGENCY EQUIPMENT

A. Fire extinguisher

1. The bus shall be equipped with at least one UL-approved pressurized dry chemical fire extinguisher. The extinguisher shall be secured in a mounted bracket, located in the driver's compartment and readily accessible to the driver and passengers. A pressure gauge shall be mounted on the extinguisher and shall be easily read without moving the extinguisher from its mounted position.

2. The fire extinguisher shall have a rating of 2-A:10-BC or greater. The operating mechanism shall be secured with a type of seal that will not interfere with the use of the fire extinguisher.

B. First-aid kit

1. The bus shall have a removable, moisture-proof and dustproof first-aid kit in an accessible place in the driver's compartment. It shall be mounted and identified as a first-aid kit. The location for the first-aid kit shall be marked.

2. Suggested contents include:

2 — 1 inch by 2 and 1/2 yards of adhesive tape rolls
24 — sterile gauze pads, 3 inches by 3 inches
100 — 3/4-inch by 3-inches adhesive bandages
8 — 2-inch bandage compress
10 — 3-inch bandage compress
2 — 2-inch by 6-feet sterile gauze roller bandages
2 — non-sterile triangular bandages, minimum 39-by-35-by-54 inches, with two safety pins
3 — sterile gauze pads 36 inches by 36 inches
3 — sterile eye pads
1 — rounded-end scissors
1 — pair of medical examination gloves
1 — mouth-to-mouth airway

C. Body fluid cleanup kit

1. Each bus shall have a removable and moisture-proof body fluid cleanup kit accessible to the driver. It shall be mounted and identified as a body fluid cleanup kit.

2. Suggested contents include:

1 — 2 ounces infectious liquids spill-control powder
1 — odor mask
1 — pair latex gloves
4 — antiseptic wipes
2 — paper crepe towels
1 — plastic scraper
1 — plastic disposal bag with scoop and tie
1 — other OSHA-required bloodborne pathogen protection, such as a protection gown and cap, goggles, red biohazard bags with ties or a special decal (red with black print)
1 — printed instructions for use of kit contents

D. Warning devices

Each school bus shall contain at least three retroreflective triangle road-warning devices that meet the requirements of FMVSS No. 125, *Warning Devices.* They shall be mounted in an accessible place.

E. Any piece of emergency equipment may be mounted in an enclosed compartment, provided the compartment is labeled with letters not less than 1 inch tall that identify each piece of equipment contained therein.

FIRE SUPPRESSION SYSTEMS (OPTIONAL)

Fire suppression system nozzles shall be located in the engine compartment, under the bus, in the electrical panel or under the dash. They shall not be located in the passenger compartment. The system must include a lamp or buzzer to alert the driver when the system has been activated.

FLOORS

A. The floor in the under-seat area, including the tops of wheelhousing, driver's compartment and toeboard, shall be covered with an elastomer floor covering having a minimum overall thickness of 1/8 inch and a calculated burn rate of 0.1 or less, using the test methods, procedures and formulas listed in FMVSS No. 302, *Flammability of Interior Materials.* The driver's area and toeboard area in all Type A buses may be manufacturer's standard flooring and floor covering.

B. The floor covering in the aisles shall be a ribbed or other raised pattern elastomer and shall have a calculated burn rate of 0.1 or less using the test methods, procedures and formulas listed in FMVSS No. 302. Minimum overall thickness shall be 3/16 inch measured from the tops of ribs.

C. The floor covering must be permanently bonded to the floor and must not crack when subjected to sudden changes in temperature. Bonding or adhesive material shall be waterproof and shall be a type recommended by the manufacturer of floor-covering material. All seams shall be sealed with waterproof sealer.

D. On Types B, C and D buses, a flush-mounted, screw-down plate that is secured and sealed shall be provided to access the fuel-tank sending unit and/or fuel pump. This plate shall not be installed under flooring material.

HANDRAILS

At least one handrail shall be installed. The handrail(s) shall assist passengers during entry or exit and shall be designed to prevent entanglement, as evidenced by the passing of the NHTSA string-and-nut test.

HEATING AND AIR CONDITIONING SYSTEMS

A. Heating System

1. The heater shall be hot water and/or combustion type.

2. If only one heater is used, it shall be fresh-air or combination fresh-air and recirculation type.

3. If more than one heater is used, additional heaters may be recirculation air type.

4. The heating system shall be capable of maintaining bus interior temperatures as specified in test procedure SAE J2233.

5. Auxiliary fuel-fired heating systems are permitted, provided they comply with the following:

   a. The auxiliary heating system shall utilize the same type of fuel as specified for the vehicle's engine.

   b. The heater(s) may be direct, hot air-type or may be connected to the engine coolant system.

   c. An auxiliary heating system, when connected to the engine coolant system, may be used to preheat the engine coolant or preheat and add supplementary heat to the heating system.

d. Auxiliary heating systems must be installed pursuant to the manufacturer's recommendations and shall not direct exhaust in such a manner that will endanger bus passengers.

e. All combustion heaters shall be in compliance with current Federal Motor Carrier Safety Regulations.;

f. The auxiliary heating system shall require low voltage.

g. Auxiliary heating systems shall comply with FMVSS No. 301, *Fuel System Integrity;* all other applicable FMVSS regulations; and SAE test procedures.

6. All forced-air heaters installed by body manufacturers shall bear a name plate that indicates the heater rating in accordance with SBMTC-001, *Standard Code for Testing and Rating Automotive Bus Hot Water Heating and Ventilating Equipment.* The plate shall be affixed by the heater manufacturer and shall constitute certification that the heater performance is as shown on the plate.

7. Heater hoses shall be adequately supported to guard against excessive wear due to vibration. The hoses shall not dangle or rub against the chassis or any sharp edges and shall not interfere with or restrict the operation of any engine function. Heater hoses shall conform to SAE J20c, *Coolant System Hoses.* Heater lines on the interior of the bus shall be shielded to prevent scalding of the driver or passengers.

8. Each hot-water system installed by a body manufacturer shall include one shut-off valve in the pressure line and one shut-off valve in the return line, with both valves at the engine in an accessible location. (On Types A and B buses, the valves may be installed in another accessible location.)

9. Each hot-water heating system shall be equipped with a device installed in the hot-water pressure line that regulates water flow to all heaters. The device shall be located for convenient operation by the driver while he or she is seated.

10. Accessible bleeder valves for removing air from the heater shall be installed in an appropriate place in the return lines of a body-company installed heater.

11. Access panels shall be provided to make heater motors, cores and fans readily accessible for service. An exterior access panel to the driver's heater may be provided.

B. Air Conditioning (Optional)

The following specifications are applicable to all types of school buses that may be equipped with air conditioning. This section is divided into two parts. Part 1 covers performance specifications, and part 2 covers other requirements applicable to all buses.

1. Performance specifications

The installed air-conditioning system should cool the interior of the bus from 100 degrees to 80 degrees Fahrenheit, measured at three points (minimum) located 4 feet above the floor on the longitudinal centerline of the bus. The three required points shall be: (1) near the driver's location, (2) at the longitudinal midpoint of the body, and (3) 2 feet forward from the emergency door; or, for Type D rear-engine buses, 2 feet forward from the end of the aisle.

The test conditions under which the above performance must be achieved shall consist of (1) placing the bus in a room (such as a paint booth) where ambient temperature can be maintained at 100 degrees Fahrenheit; (2) heat-soaking the bus at 100 degrees Fahrenheit with windows open for at least one hour; and (3) closing windows, turning on the air conditioner with the engine running at the chassis manufacturer's recommended low idle speed, and cooling the interior of the bus to 80 degrees Fahrenheit or lower within 30 minutes while maintaining an outside temperature of 100 degrees Fahrenheit.

Alternately and at the user's discretion, this test may be performed under actual summer conditions, which consist of temperatures above 85 degrees Fahrenheit, humidity above 50 percent with normal sun loading of the bus and the engine running at the engine manufacturer's recommended low idle speed. After a minimum one hour of heat-soaking, the system shall be turned on and must provide a minimum of a 20 degree temperature drop in the 30 minute time limit.

The manufacturer shall provide facilities for the user or user's representative to confirm that a pilot model of each bus design meets the above performance requirements.

2. Other requirements

a. Evaporator cases, lines and ducting (as equipped) shall be designed in such a manner that all condensation is effectively drained to the exterior of the bus below the floor level under all conditions of vehicle movement and without leakage on any interior portion of the bus.

b. Evaporators and ducting systems shall be designed and installed to be free of projections or sharp edges. Ductwork shall be installed so that exposed edges face the front of the bus and do not present sharp edges.

c. On school buses equipped with Type-2 seatbelts having anchorages above the windows, the evaporator and ducting (if used) shall be placed at a height sufficient so as to not obstruct occupant-securement anchorages. This clearance shall be provided along the entire length of the passenger area on both sides of the bus interior.

d. The body may be equipped with insulation – including sidewalls, roof, firewall, rear, inside body bows, and plywood or composite floor insulation – to reduce thermal transfer.

e. All glass (windshield, service and emergency doors, side and rear windows) may be equipped with the maximum integral tinting allowed by federal, state or ANSI standards for the respective locations. Windows at the rear of the driver's compartment, if tinted, shall have approximately 28 percent light transmission;

f. Electrical-generating capacity shall be provided to accommodate the additional electrical demands imposed by the air-conditioning system.

g. Roofs may be painted white to aid in heat dissipation. (See Appendices, School Bus Chassis and Body.)

h. Air intake for any evaporator assembly, except for a front evaporator of Type A-1, shall be equipped with replaceable air filter(s) that are accessible without disassembling the evaporator case.

HINGES

All exterior metal door hinges shall be designed to allow for lubrication to be channeled at the center 75 percent of each hinge loop without disassembly unless the hinges are constructed of stainless steel, brass or non-metallic hinge pins, or another design that prevents corrosion.

IDENTIFICATION

A. The body shall bear the words “SCHOOL BUS” in black letters at least 8 inches high on both the front and rear of the body or on signs attached thereto. Lettering shall be placed as high as possible without impairment of its visibility. Letters shall conform to Series B of Standard Alphabets for Highway Signs. ”SCHOOL BUS” shall have a reflective background, or it may be illuminated by backlighting.

B. Required lettering and numbering shall include:

1. The bus identification number shall be displayed on the sides, the rear and the front.

2. Each bus shall have lettered on the rear in plain and distinct black letters “STATE LAW – STOP – While Bus is Loading and Unloading.” The letters in the words “STATE LAW – STOP” shall not be less than 5 inches in height, and letters in the words “While Bus is Loading and Unloading” shall not be less than 3 inches in height.

3. On each side of a district-owned bus, the school district name shall be displayed in black letters not less than 3 inches in height with a stroke of not less than 3/8 inch wide. If such lettering is placed on the sides of contracted vehicles, the lettering shall be black.

4. Privately-owned school buses shall display, on each side in a conspicuous location, the name and address of the owner in black letters at least 2 inches in height with a stroke of not less than 1/4 inch in width.

C. Other lettering, numbering or symbols that may be displayed on the exterior of the bus shall be limited to:

1. The bus identification number on the top of the bus (in addition to required numbering on the sides, rear and front)

2. The battery location as identified by the word “BATTERY” or “BATTERIES” on the battery-compartment door in 2 inch lettering

3. Symbols or letters, not to exceed 64 square inches of total display near the entrance door, that give information for the identification of the bus or route served

4. Manufacturer, dealer or school identification or logos

5. Symbols identifying the bus as being equipped for or transporting students with special needs (See Section 5)

6. The identification of fuel type in 2-inch lettering adjacent to the fuel-filler opening.

7. Lettering or signs indicating “No trespassing” as located on the inside of the bus.

D. Signs or stickers on the rear of the bus not relating to school bus flashing signal lamps, railroad-stop procedures or other similar safety messages are prohibited.

INSIDE HEIGHT

The inside body height shall be 72 inches or more as measured metal to metal at any point on the longitudinal centerline from the front vertical bow to the rear vertical bow. The inside body height of Type A-1 buses shall be 62 inches or more.

INSULATION

A. Ceilings and walls shall be insulated with fire-resistant, UL-approved thermal insulation with a minimum R-value of 5.5. Insulation shall be installed so as to prevent sagging.

B. If floor insulation is required, it shall be 5-ply softwood plywood of a nominal 5/8 inch thickness, and it shall be equal to or exceed properties of the exterior-type C-D Grade as specified in the standard issued by U.S. Department of Commerce. When plywood is used, all exposed edges shall be sealed. Type A-1 buses may be equipped with nominal 1/2-inch thick plywood or an equivalent material meeting the above requirements. Equivalent material may be used to replace plywood, provided it has an equal or greater insulation R-value, sound abatement, and deterioration-resistant and moisture-resistant properties.

INTERIOR

A. The interior of the bus shall be free from all unnecessary projections, including luggage racks and attendant handrails, to minimize the potential for injury. This specification requires inner lining on ceilings and walls. If the ceiling is constructed with lap joints, the forward panel shall be lapped by the rear panel and exposed edges shall be beaded, hemmed, flanged or otherwise treated to minimize sharp edges. Buses may be equipped with a storage compartment for tools, tire chains and tow chains. (See Section 3, Storage Compartment.)

B. Interior overhead-storage compartments may be provided if they:

1. Meet the head-protection requirements of FMVSS No. 222, *School Bus Passenger Seating and Crash Protection,* where applicable

2. Are completely enclosed and equipped with a latching door – both door and latch must be able to withstand a pushing force of 50 pounds when applied to the inside center of the door

3. Have all corners and edges be rounded with a minimum radius of 1 inch or be a padded equivalent to door-header padding

4. Are attached to the bus sufficiently to withstand a force equal to 20 times the maximum rated capacity of the compartment

5. Have no protrusions greater than 1/4 inch.

C. The driver's area forward to the foremost padded barriers will permit the mounting of safety equipment and vehicle-operation equipment.

D. Every school bus shall be constructed so that the noise level at the occupant nearest to the primary vehicle-noise source shall not exceed 85 dBA when tested according to the procedure described in Appendices, School Bus Chassis and Body.

LAMPS AND SIGNALS

A. Interior lamps that illuminate the aisle and stepwell shall be provided. The stepwell lamp shall be illuminated by an entrance-door-operated switch that illuminates only when the headlamps and clearance lamps are on and the entrance door is open.

B. Body instrument-panel lamps may be controlled by an independent rheostat switch, or they may be controlled by the rheostat that operates the gauge lighting.

C. School bus alternately-flashing signal lamps shall be provided as described below:

1. The bus shall be equipped with two red lamps at the rear of the vehicle and two red lamps at the front.

2. In addition to the four red lamps described above, four amber lamps shall be installed so that one amber lamp is located near each red signal lamp at the same level but closer to the vertical centerline of the bus. The system of red and amber signal lamps shall be wired so that amber lamps are energized manually. The red lamps are automatically energized and amber lamps are automatically de-energized when the stop-signal arm is

extended or when the bus entrance door is opened. An amber pilot lamp and a red pilot lamp shall be installed, adjacent to the driver controls for the flashing signal lamp, to indicate to the driver which lamp system is activated.

3. The area around the lenses of alternately-flashing signal lamps shall be black. Visors or hoods, black in color, with a minimum depth of 4 inches may be provided. (See also Appendices, School Bus Chassis and Body.)

4. Red lamps shall flash at any time the stop-signal arm is extended.

5. All flashers for alternately-flashing red and amber signal lamps shall be enclosed in the body at readily accessible locations.

D. Turn signal and stop/tail lamps

1. The bus body shall be equipped with amber rear turn-signal lamps that are at least 7 inches in diameter or a minimum 38 square inches of illuminated area if a shape other than round. The lamps shall meet the requirements of FMVSS No. 108, *Lamps, Reflective Devices, and Associated Equipment.* These signal lamps must be connected to the chassis hazard-warning switch to cause the simultaneous flashing of turn-signal lamps as a vehicular traffic hazard warning when needed. Turn-signal lamps are to be placed as wide apart as is practical, and their horizontal centerline shall be a maximum of 12 inches below the rear window. Type A-1 conversion-vehicle lamps must be at least 21 square inches in lens area and must be in the manufacturer's standard color.

2. Buses shall be equipped with amber side-mounted turn-signal lamps. The turn-signal lamp on the left side shall be mounted rearward of the stop-signal arm, and the turn-signal lamp on the right side shall be mounted rearward of the entrance door.

3. If turn-signal lamps in addition to those supplied on the chassis are provided (front of the body below the windshield, or on top of the fender), they shall be connected to the turn-signal system without the removal or disconnection of turn-signal lamps supplied on the chassis.

4. Buses shall be equipped with four combination red stop/tail lamps.

   a. Two combination lamps with a minimum 7-inch diameter, or a minimum 38 square inches of illuminated area if a shape other than round, shall be

mounted on the rear of the bus just inside of the turn-signal lamps.

b. Two combination lamps with a minimum 4-inch diameter, or a minimum of 12 square inches of illuminated area if a shape other than round, shall be placed on the rear of the body between the beltline and the floor line. The rear license-plate lamp may be combined with one lower tail lamp. Stop lamps shall be activated by the service brakes and shall emit a steady light when illuminated. Type A-1 buses with bodies supplied by a chassis manufacturer may be equipped with the manufacturer's standard stop and tail lamps.

E. On a bus equipped with a monitor for the front and rear lamps, the monitor shall be mounted in full view of the driver. If the full circuit current passes through the monitor, each circuit shall be protected against short circuit or intermittent shorts by a fuse circuit breaker or electronic protection device.

F. An optional white-flashing strobe lamp may be installed on the roof of a school bus at a location not to exceed 1/3 the body length forward from the rear of the roof edge. The lamp shall have a single clear lens emitting light 360 degrees around its vertical axis, and the lamp may not extend above the roof more than the maximum legal height. A manual switch and pilot lamp shall be included to indicate when the lamp is in operation. The strobe lamp may be mounted on the roof in the area directly over the restraining barrier on the driver's side. It may be wired to activate with the amber alternately-flashing signal lamps, continuing through the full loading or unloading cycle. It also may be equipped with an override switch to allow activation of the strobe for use in inclement weather.

G. The bus body shall be equipped with two white rear backup lamps that are at least 4 inches in diameter or a minimum of 12 square inches of illuminated area if a shape other than round. The lamps shall meet the requirements of FMVSS No. 108. If backup lamps are placed on the same horizontal line as the brake lamps and turn signal lamps, the backup lamps shall be to the inside.

METAL TREATMENT

A. All metal, except high-grade stainless steel or aluminum, used in construction of the bus body shall be zinc-coated, aluminum-coated or treated to prevent corrosion. This includes but is not limited to items such as structural members, inside and outside panels, door panels, and floor sills. Items such as door handles, grab handles, interior decorative parts and other interior plated parts are excluded.

B. In addition to the above requirements, all metal parts to be painted shall be chemically cleaned, etched, coated with zinc phosphate and primed with zinc chromate or epoxy to improve paint adhesion.

C. When providing for these requirements, particular attention shall be given to lapped surfaces, welded connections of structural members, cut edges on punched or drilled hole areas in sheet metal, closed or box sections, unvented or undrained areas, and surfaces subjected to abrasion during vehicle operation.

D. As evidence that the above requirements have been met, samples of materials and sections used in the construction of the bus body shall not lose more than 10 percent of material by weight when subjected to a 1,000-hour salt-spray test as provided for in the latest revision of ASTM Standard B-117.

MIRRORS

A. The interior glass mirror shall be either laminated or tempered, and it shall have rounded corners and protected edges. Mirrors shall be 6 inches by 16 inches minimum for Type A buses and be 6 inches by 30 inches minimum for Types C and D buses.

B. Each school bus shall be equipped with exterior mirrors meeting the requirements of FMVSS No. 111, *Rearview Mirrors.* The right side rearview mirror shall not be obscured by any unwiped portion of the windshield. Mirrors shall be easily adjustable, but shall be rigidly braced so as to reduce vibration.

C. Heated external mirrors may be used.

D. Remote-controlled external rearview mirrors may be used.

MOUNTING

A. The rear body cross member shall be supported by the chassis frame. Except where chassis components interfere, the bus body shall be attached to the chassis frame at each main floor sill in such a manner so as to prevent shifting or the separation of the body from the chassis under severe operating conditions.

B. Isolators shall be installed at all contact points between the body and the chassis frame on Types A-2, B, C and D buses, and isolators shall be secured by a positive means to the chassis frame or body to prevent shifting, separation or displacement under severe operating conditions.

OVERALL LENGTH

The overall length of the bus shall not exceed 45 feet excluding accessories.

OVERALL WIDTH

The overall width of bus shall not exceed 102 inches excluding accessories.

POST-TRIP SAFETY ALARM (OPTIONAL)

It is recommended that a post-trip safety alarm be installed to ensure that no children will be left on a school bus. The post-trip safety-alarm system requires the driver to walk to the rear of the bus and check for children in order to disarm the alarm.

A. The post-trip safety-alarm system shall activate when the engine or electrical system has been turned off.

B. The system shall have a driver-alert notification mechanism.

C. The system shall have a switch accessible by the driver and located in the rear of the bus.

PUBLIC-ADDRESS SYSTEM

A. Buses may be equipped with an AM/FM audio and/or public-address system with interior and exterior speakers.

B. Other than the driver's communication system, no internal speakers may be installed within 4 feet of the driver's seat-back in its rearmost, upright position.

RETROREFLECTIVE MATERIAL

(See Appendices, School Bus Chassis and Body – Retroreflective Sheeting.)

A. The front and/or rear bumper may be marked diagonally 45 degrees down toward the centerline of the pavement with 2 ± 1/4 inch wide strips of non-contrasting retroreflective material.

B. In order to outline the perimeter of the back of the bus, the rear of the bus body shall be marked with strips of retroreflective NSBY that conforms with the requirements of FMVSS No. 131, *School Bus Pedestrian Safety Devices,* Table 1. The perimeter marking of rear emergency exits as per FMVSS No. 217, *Bus Emergency Exits and Window Retention and Release,* and/or the use of retroreflective "SCHOOL BUS" signs, partially accomplishes the objective of this

requirement. To complete the perimeter marking of the back of the bus, strips of at least 1 and 3/4 inch retroreflective NSBY material shall be applied horizontally above the rear windows and above the rear bumper, extending from the rear emergency-exit perimeter, and then marking outward to the left and right rear corners of the bus. Vertical strips shall be applied at the corners to connect these horizontal strips.

C. If not a lighted design, “SCHOOL BUS” signs shall be marked with retroreflective NSBY material comprising the background for lettering of the front and/or rear “SCHOOL BUS” signs.

D. Sides of the bus body shall be marked with at least 1 and 3/4 inch retroreflective NSBY material, extending the length of the bus body and located vertically between the floor line and the beltline.

E. If used, signs placed on the rear of the bus relating to school bus flashing-signal lamps or railroad-stop procedures may be retroreflective material.

RUB RAILS

A. There shall be one rub rail on each side of the bus located at, or no more than 8 inches above the seat-cushion level. The rub rails shall extend from the rear side of the entrance door completely around the bus body (except at the emergency door or any maintenance-access door) to the point of curvature near the outside cowl on the left side.

B. There shall be one additional rub rail on each side located 10 inches or less above the floor line. This rub rail shall cover the same longitudinal span as the upper rub rail except at the wheelhousing, and it shall extend only to the longitudinal tangent of the right and left rear corners.

C. Rub rails above the floor line shall be attached at each body post and at all other upright structural members.

D. In its finished form, each rub rail shall be 4 inches or more in width and shall be constructed out of 16-gauge metal or a material of equivalent strength that is suitable to help protect body side panels from damage. Rub rails shall be constructed in corrugated or ribbed fashion.

E. Rub rails shall be applied outside the body or outside the body posts. (Pressed-in or snap-on rub rails do not satisfy this requirement.) For Type A-1 vehicles using bodies provided by a chassis manufacturer or for Types A-2, B, C and D buses containing the rear-luggage or rear-engine compartment, rub rails need not extend around the rear corners.

F. The bottom edge of body side skirts shall be stiffened by the application of a rub rail, or the edge may be stiffened by providing a flange or another stiffener.

SEATS AND RESTRAINING BARRIERS

A. Passenger seating

1. School bus design capacities shall be in accordance with 49 CFR, Part 571.3, *Definitions;* and FMVSS No. 222, *School Bus Passenger Seating and Crash Protection.*

2. All seats shall have a minimum cushion depth of 15 inches and a seat-back height of 24 inches above the seating reference point. Seats must comply with all other requirements of FMVSS No. 222. In addition to the fastener that forms the pivot for each seat retaining clip, a secondary fastener may be used in each clip to prevent the clip from rotating and unintentionally releasing the seat cushion.

3. All restraining barriers and passenger seats shall be constructed with materials that enable them to meet the criteria of the School Bus Seat Upholstery Fire Block Test.

4. Each seat leg shall be secured to the floor by a minimum of two bolts, washers and nuts. Flange-head nuts may be used in lieu of nuts and washers, or seats may be track-mounted in conformance with FMVSS No. 222. If track seating is installed, the manufacturer shall supply minimum and maximum seat-spacing dimensions (applicable to the bus) that comply with FMVSS No. 222. This information shall be on a label permanently affixed to the bus.

5. All seat frames attached to the seat rail shall be fastened with two or more bolts, washers and nuts, or with flange-head nuts.

6. All school buses including Type A shall be equipped with restraining barriers with a height equal to the seat-back height that conforms to FMVSS No. 222.

7. A flip-up seat may be installed at any side emergency door. If provided, the flip-up seat shall conform to FMVSS No. 222 and the aisle-clearance requirements of FMVSS No. 217, *Bus Emergency Exits and Window Retention and Release.* The flip-up seat shall be free of sharp projections on its underside. The underside of the flip-up seat bottom shall be padded or contoured to reduce the possibility of snagged clothing. The flip-up seat shall be constructed to prevent passenger limbs from becoming entrapped between the seat back and cushion when

the seat is in an upright position. The seat cushion shall be designed to rise automatically to a vertical position when not occupied.

8. Lap belts shall not be installed on passenger seats in large school buses (over 10,000 pounds GVWR) except in conjunction with child safety restraint systems that comply with the requirements of FMVSS No. 213, *Child Restraint Systems.*

B. Preschool age seating

Passenger seats designed to accommodate a child or an infant-carrier seat shall comply with FMVSS No. 225, *Child Restraint Anchorage Systems.* These seats shall be in compliance with NHTSA's "Guideline for the Safe Transportation of Pre-school Age Children in School Buses." **(Note:** See A.8, above)

C. Driver's seat

1. The driver's seat supplied by the body manufacturer shall be a high-back seat. The seat back shall be adjustable to a 15-degree minimum without requiring the use of tools. The seat shall be equipped with a head restraint to accommodate from a fifth-percentile female to a ninety-fifth-percentile adult male as defined in FMVSS No. 208, *Occupant Crash Protection.*

2. Type A buses may utilize the standard driver's seat provided by the chassis manufacturer.

D. Driver restraint system

A Type 2 lap/shoulder belt shall be provided for the driver. On buses in which the driver's seat and upper anchorage for the shoulder belt are both attached to the body structure, a driver's seat with an integrated Type 2 lap/shoulder belt may be substituted. On buses where the driver's seat and upper anchorage for the shoulder belt are separately attached to both body and chassis structures (one is attached to the chassis, and the other is attached to the body), a driver's seat with an integrated Type 2 lap/shoulder belt should be used.

The assembly shall be equipped with an emergency locking retractor for the continuous belt system. On all buses except Type A that are equipped with a standard chassis manufacturer's driver's seat, the lap portion of the belt system shall be guided or anchored to prevent the driver from sliding sideways under the belt system. The lap/shoulder belt shall be designed to allow for easy adjustment in order to fit properly and to effectively protect drivers varying in size from a fifth-percentile adult female to a ninety-fifth-percentile adult male.

E. Each bus shall be equipped with a durable webbing cutter having a full-width handgrip and a protected, replaceable or non-corrodible blade. The required belt cutter shall be mounted in a location accessible to the seated driver in an easily detachable manner.

SIDE SKIRTS

School bus body side skirts between the front and rear axles shall extend down at least to the horizontal line from the center of the front spindle to the center of the rear axle. This measurement shall apply to a new, unloaded school bus located on a flat, level surface.

STEERING WHEEL

(See Section 3, Steering Gear.)

STEPS

A. The first step at the entrance door shall not be less than 10 inches and shall not be more than 14 inches from the ground when measured from the top surface of the step to the ground as based on standard chassis specifications. On Type D vehicles, the first step at the entrance door shall be 12 to 16 inches from the ground. An auxiliary step may be provided to compensate for the increase in ground-to-first-step clearance. The auxiliary step is not required to be enclosed.

B. Step risers shall not exceed a height of 10 inches. However, when plywood is used on a steel floor or step, the riser height may be increased by the thickness of the plywood.

C. Steps shall be enclosed to prevent the accumulation of ice and snow.

D. Steps shall not protrude beyond the side body line.

STEP TREADS

A. All steps, including the floor line platform area, shall be covered with an elastomer floor covering having a minimum overall thickness of 0.187 inch.

B. The step covering shall be permanently bonded to a durable backing material that is resistant to corrosion.

C. Including the floor line platform area, steps shall have a 1 and 1/2 inch nosing that contrasts in color by at least 70 percent as measured in accordance with the contrasting color specification in 36 CFR, Part 1192, ADA, *Accessibility Guidelines for Transportation Vehicles.*

D. Step treads shall have the following characteristics:

1. Abrasion resistance – Step-tread material weight loss shall not exceed 0.40 percent,as tested under ASTM D-4060, *Standard Test Method for Abrasion Resistance of Organic Coatings by the Taber Abraser* (CS-17 Wheel, 1000 gram, 1000 cycle).

2. Weathering resistance – Step treads shall not break, crack or check after ozone exposure (seven days at 50 phm at 40 degrees Celsius) and weatherometer exposure (ASTM D-750, *Standard Test Method for Rubber Deterioration in Carbon-Arc Weathering Apparatus,* 7 days).

3. Flame resistance – Step treads shall have a calculated burn rate of .01 or less using the test methods, procedures and formulas listed in FMVSS No. 302, *Flammability of Interior Materials.*

STIRRUP STEPS

If the windshield and lamps are not easily accessible from the ground, there may be at least one folding stirrup step or recessed foothold installed on each side of the front of the body for easy accessibility during cleaning. There may also be a grab handle installed in conjunction with the step. Steps are permitted in or on the front bumper in lieu of the stirrup steps if the windshield and lamps are easily accessible from that position.

STOP-SIGNAL ARM

Stop-signal arms shall comply with the requirements of FMVSS No. 131, *School Bus Pedestrian Safety Devices.*

STORAGE COMPARTMENT (OPTIONAL)

A storage container for tools, tire chains and other equipment may be located either inside or outside the passenger compartment. If inside, the container shall be fastened to the floor and shall have a cover with a positive fastening device.

SUN SHIELD

A. For Types B, C and D vehicles, an interior, adjustable and transparent sun shield, with a finished edge and dimensions not less than 6 by 30 inches, shall be installed in a position convenient for use by the driver.

B. On Type A buses, the sun shield (visor) shall be installed by the chassis manufacturer.

TAILPIPE

A. The tailpipe may be flush with, but shall not extend more than 2 inches beyond, the perimeter of the body for a side-exit pipe or the bumper for a rear-exit pipe.

B. The tailpipe shall exit to the left of the emergency-exit door in the rear of the vehicle or to the left side of the bus in front of or behind the rear drive axle. The tailpipe exit location on all Types A-1 or B-1 buses may be in accordance to the manufacturer's standards. The tailpipe shall not exit beneath any fuel-filler location or beneath any emergency door.

TOWING ATTACHMENT POINTS

Rear-towing devices (tow hooks, tow eyes or other designated towing attachment points) shall be furnished to assist in the retrieval of buses that are stuck or for towing buses when a wrecker with a wheel lift or an axle lift is not available or cannot be applied.

A. Towing devices shall be attached to the chassis frame by either the chassis manufacturer or in accordance with the chassis manufacturer's specifications.

B. Each rear-towing device shall have a strength rating of 13,500 pounds with the force applied in the rearward direction, applied parallel to the ground and applied parallel to the longitudinal axis of the chassis frame rail.

C. The towing devices shall be mounted so they do not project rearward of the rear bumper.

TRACTION ASSISTING DEVICES (OPTIONAL)

A. Where required or used, sanders shall:

1. Be of a hopper cartridge-valve type

2. Have a metal hopper with all interior surfaces treated to prevent the condensation of moisture

3. Have at least 100 pounds (grit) capacity

4. Have a cover that screws in place on the filler opening of the hopper, thereby sealing the unit airtight

5. Have discharge tubes extending under the fender wheelhousing to the front of each rear wheel

6. Have non-clogging discharge tubes with slush-proof, non-freezing rubber nozzles

7. Be operated by an electric switch with a pilot lamp mounted on the instrument panel, located so as to be exclusively controlled by the driver

8. Be equipped with a gauge to indicate when the hopper reaches the one-quarter level and needs to be refilled

9. Be designed to prevent the freezing of all activation components and moving parts.

B. Automatic traction chains may be installed.

TRASH CONTAINER AND HOLDING DEVICE (OPTIONAL)

When requested or used, the trash container shall be secured by a holding device that is designed to prevent movement and to allow easy removal and replacement. The container shall be installed in an accessible location in the driver's compartment, not obstructing passenger access to the entrance door.

UNDERCOATING

A. The entire underside of the bus body (including floor sections, cross member and below floor line side panels) shall be coated with rust-proofing material. The material manufacturer must issue a notarized certification to the bus body manufacturer that the materials meet or exceed all performance and qualitative requirements of paragraph 3.4 of Federal Specification TT-C-520b, *Coating Compound, Bituminous, Solvent Type, Underbody (For Motor Vehicles),* using modified test procedures for the following requirements:

1. Salt-spray resistance test modified to 5 percent salt and 1,000 hours

2. Abrasion resistance

3. Fire resistance

Test panels are to be prepared in accordance with paragraph 4.6.12 of TT-C-520b with modified procedure requiring that the test be made on a 48-hour air-cured film at a thickness recommended by the material manufacturer.

B. The undercoating material shall be applied with suitable airless or conventional spray equipment to the recommended film thickness, and it shall show no evidence of voids in the cured film.

VENTILATION

A. Auxiliary fans shall meet the following requirements:

1. Fans for the left and right sides of the windshield shall be placed in a location where they can be adjusted for maximum effectiveness and where they do not obstruct vision to any mirror. (**Note:** Type A buses may be equipped with one fan.)

2. Fans shall have a 6-inch (nominal) diameter.

3. Fan blades shall be enclosed in a protective cage. Each fan shall be controlled by a separate switch.

B. The bus body shall be equipped with a suitably controlled ventilation system with a capacity sufficient to maintain the proper quantity of air flow under operating conditions without having to open a window except in extremely warm weather.

C. Static-type, non-closeable exhaust ventilation shall be installed in a low-pressure area of the roof.

D. Roof hatches designed to provide ventilation in all types of exterior weather conditions may be provided.

WHEELHOUSING

A. The wheelhousing opening shall allow for easy tire removal and service.

B. Wheelhousing shall be attached to the floor panels in a manner to prevent any dust, water or fumes from entering the body. Wheelhousing shall be constructed of 16-gauge or thicker steel.

C. The inside height of the wheelhousing above the floor line shall not exceed 12 inches.

D. The wheelhousing shall provide clearance for the installation and use of tire chains on single or dual (if so equipped) power-driving wheels.

E. No part of a raised wheelhousing shall extend into the emergency-door opening.

WINDOWS

A. Other than emergency exits designated to comply with FMVSS No. 217, *Bus Emergency Exits and Window Retention and Release,* each side window shall provide an unobstructed opening of at least 9 inches high (but not more than 13 inches high) and at least 22 inches wide to be obtained by lowering the window. One window on each side of the bus may be less than 22 inches wide.

B. Optional tinted and/or frost-free glazing may be installed on all doors and windows.

C. Windshields shall comply with federal, state and local regulations.

WINDSHIELD WASHERS

A windshield-washer system shall be provided.

WINDSHIELD WIPERS

A. A two-speed or variable-speed windshield-wiping system with an intermittent feature shall be provided and shall be operated by a single switch.

B. The wipers shall meet the requirements of FMVSS No. 104, *Windshield Wiping and Washing Systems.*

WIRING

A. Wiring

1. All wiring shall conform to current SAE standards.

2. All wiring shall have an amperage capacity exceeding the design load by at least 25 percent. All wiring splices are to be accessible and noted on the wiring diagram.

3. A body wiring diagram, sized so as to be read easily, shall be furnished with each bus body or affixed to an area convenient to the electrical-accessory control panel.

4. The body power wire shall be attached to a special terminal on the chassis.

5. Each wire that passes through metal openings shall be protected by a grommet.

6. Wires not enclosed within the body shall be fastened securely at intervals of not more than 18 inches. All joints shall be soldered

or joined by equally effective connectors, which shall be water-resistant and corrosion-resistant.

B. Circuits

1. Wiring shall be arranged in circuits as required. Each circuit shall be protected by a fuse breaker or an electronic protection device. A coding system of colors and numbers shall be used, and an appropriate identifying diagram shall be provided to the end user, along with the wiring diagram provided by the chassis manufacturer. The wiring diagrams shall be specific to the bus model supplied and shall include any changes to wiring made by the body manufacturer. Chassis-wiring diagrams shall also be supplied to the end user. The following body interconnecting circuits shall be color-coded as noted:

FUNCTION	COLOR
Left rear directional lamp	Yellow
Right rear directional lamp	Dark green
Stop lamps	Red
Backup lamps	Blue
Tail lamps	Brown
Ground	White
Ignition feed, primary feed	Black

The colors of the cables shall correspond to SAE J1128, *Low-Tension Primary Cable.*

2. Wiring shall be arranged in at least six regular circuits as follows:

   a. Head, tail, stop (brake) and instrument-panel lamps

   b. Clearance lamps and stepwell lamps that shall be actuated when the entrance door is open

   c. Dome lamps

   d. Ignition and emergency-door signal

   e. Turn-signal lamps

   f. Alternately-flashing signal lamps.

3. Any of the above combination circuits may be subdivided into additional independent circuits.

4. Heaters and defrosters shall be wired on an independent circuit.

5. All other electrical functions, such as sanders and electric-type windshield wipers, shall be provided with independent and properly protected circuits whenever possible,

6. Each body circuit shall be coded by number or letter on a diagram of circuits and shall be attached to the body in a readily accessible location.

C. Buses may be equipped with a 12-volt power port in the driver's area.

D. There shall be a manual noise-suppression switch installed in the control panel. The switch shall be labeled and alternately colored. This switch shall be an on/off type deactivating body equipment that produces noise, including at a minimum the AM/FM radio, heaters, air conditioners, fans and defrosters. This switch shall not deactivate safety systems such as windshield wipers or lighting systems.

E. The entire electrical system of the body shall be designed for the same voltage as the chassis on which the body is mounted.

SECTION 5 – SPECIALLY EQUIPPED SCHOOL BUS SPECIFICATIONS

INTRODUCTION

Equipping buses to accommodate students with disabilities is dependent upon the needs of the passengers. While one bus may be fitted with a lift, another may have belts installed to secure child seats. Buses so equipped are not to be considered a separate class of school bus. They are simply a regular school bus that is equipped for special accommodations.

The specifications in this section are intended to supplement specifications in the chassis and body sections. In general, specially equipped buses shall meet all the requirements of the preceding sections plus those listed in this section. It is recognized that the field of special transportation is characterized by varied needs for individual cases and by rapidly emerging technologies. Therefore, a flexible, common-sense approach to the adoption and enforcement of specifications for these vehicles is prudent.

As defined by 49 Code of Federal Regulations (CFR) §571.3, "*Bus* means a motor vehicle with motive power, except a trailer, designed for carrying more than ten persons" (11 or more including the driver). This definition also embraces the more specific category of school bus. Vehicles with 10 or fewer occupant positions (including the driver) are not classified as buses. For this reason, the federal vehicle classification of *multipurpose passenger vehicle* or MPV (49 CFR § 571.3) must be used by manufacturers for these vehicles in lieu of the classification *school bus*. The definition of *designated seating position* in 49 CFR § 571.3 states that, in the case of "vehicles sold or introduced into interstate commerce for purposes that include carrying students to and from school or related events" and which are "intended for securement of an occupied wheelchair during vehicle operations," each wheelchair-securement position shall be counted as four designated seating positions when determining the classification (whether school bus or MPV). This classification system does not preclude state or local agencies, or national specifications, from requiring compliance of school bus-type MPVs with the more stringent federal standards for school buses. The following specifications address modifications pertaining to school buses that, with standard seating arrangements prior to modification, would accommodate 11 or more occupants including the driver. If, by the addition of a power lift, wheelchair positions or other modifications, the capacity is reduced such that these vehicles become MPVs, the intent of these specifications is to require these vehicles to meet the same specifications they would have had to meet prior to such modifications. Such MPVs are included in all references to school buses and the requirements for school buses that follow.

DEFINITION

A *specially equipped school bus* is any school bus that is designed, equipped and/or modified to accommodate students with special transportation needs.

GENERAL REQUIREMENTS

A. Specially equipped school buses shall comply with FMVSS regulations and the Missouri Minimum Standards for School Buses as applicable to their Gross Vehicle Weight Rating (GVWR) categories.

B. Any school bus to be used for the transportation of children who utilize a wheelchair or other mobile-positioning device, or who require life-support equipment that prohibits use of the regular service entrance, shall be equipped with a power lift unless a ramp is needed for unusual circumstances related to passenger needs.

AISLES

A school bus equipped with a power lift shall provide a minimum 30-inch aisle leading from any wheelchair position to at least one emergency-exit door. A wheelchair-securement position shall never be blocking or located directly in front of a power-lift door location.

GLAZING

Tinted glazing may be installed on all doors, windows and windshields as consistent with federal, state and local regulations.

IDENTIFICATION

Specially equipped school buses shall display the International Symbol of Accessibility below the window line. Such emblems shall be white on a blue or black background, shall not exceed 12 inches square in size and shall be of a high-intensity, retroreflective material that meets the requirements of Federal Highway Administration (FHWA) FP-85, *Standard Specifications for Construction of Roads and Bridges on Federal Highway Projects.*

PASSENGER-CAPACITY RATING

In determining the passenger capacity of a school bus for purposes other than actual passenger load (vehicle classification or various billing/reimbursement models), any location in a school bus intended for the securement of a wheelchair during vehicle operation shall be regarded as four designated seating positions, and each lift area shall count as four designated seating positions.

POWER LIFTS AND RAMPS

A. The power lift shall be located on the right side of the bus body. (**Exception:** The lift may be located on the left side of the bus only if the bus is only used to deliver students to the left side of one-way streets.)

1. A ramp device may be used in lieu of a mechanical lift if the ramp meets all the requirements of the Americans with Disabilities Act (ADA) as found in 36 CFR §1192.23, *Vehicle ramp.*

2. A ramp device that does not meet the specifications of ADA but meets the specifications of paragraph C of this section may be installed and used but only when a power-lift system is not adequate to load and unload students with special and unique needs. A readily accessible ramp may be installed for emergency-exit use. If stowed in the passenger compartment, the ramp must be properly secured and placed away from general passenger contact. It must not obstruct or restrict any aisle or exit while in a stowed or deployed position.

3. All specially equipped school buses shall provide a level-change mechanism or boarding device (a lift or ramp) that complies with paragraphs B or C of this section, with sufficient clearances to permit a wheelchair user to reach a securement location.

B. Vehicle lift and installation

1. General – Vehicle lifts and installations shall comply with the requirements set forth in FMVSS 403, *Platform Lift Systems for Motor Vehicles,* and FMVSS 404, *Platform Lift Installations in Motor Vehicles.*

2. Design loads – The design load of the lift shall be at least 800 pounds. Working parts such as cables, pulleys and shafts, which can be expected to wear and upon which the lift depends for support of the load, shall have a safety factor of at least six based on the ultimate strength of the material. Non-working parts such as platform, frame and attachment hardware that would not be expected to wear, shall have a safety factor of at least three based on the ultimate strength of the material.

3. Lift capacity – The lifting mechanism and platform shall be capable of operating effectively with a wheelchair-and-occupant weight of at least 800 pounds.

4. Controls – See 49 CFR 571.403, S6.7, *Control systems.*

5. Emergency operations – See 49 CFR 571.403, S6.9, *Backup operation.*

6. Power or equipment failures – See 49 CFR 571.403, S6.2.2, *Maximum platform velocity.*

7. Platform barriers – See 49 CFR 571.403, S6.4.7, *Wheelchair retention.*

8. Platform surface – See 49 CFR 571.403, S6.4.2, S6.4.3, *Platform requirements.*

9. Platform gaps and entrance ramps – See 49 CFR 571.403, S6.4.4, *Gaps, transitions and openings.*

10. Platform deflection – See 49 CFR 571.403, S6.4.5, *Platform deflection.*

11. Platform movement – See 49 CFR 571.403, S6.2.3, *Maximum platform acceleration.*

12. Boarding direction – The lift shall permit both the inboard and outboard facing of wheelchair and mobility-aid users.

13. Use by standees – Lifts shall accommodate people who use walkers, crutches, canes or braces, or who otherwise have difficulty using steps. The platform may be marked to indicate a preferred standing position.

14. Handrails – See 49 CFR 571.403, S6.4.9, *Handrails.*

15. Circuit breaker – A resettable circuit breaker shall be installed between the power source and the lift motor if electrical power is used. It shall be located as close to the power source as possible but not within the passenger/driver compartment.

16. Excessive pressure – See 49 CFR 571.403, S6.8, *Jacking prevention.*

17. Documentation – The following information shall be provided for each vehicle equipped with a lift:

    a. A phone number at which information can be obtained about installation, repairs and parts (detailed written instructions and a parts list shall be available upon request)

    b. Detailed instructions, regarding the use of the lift, that are readily visible when the lift door is open, including a diagram showing the proper placement and positioning of wheelchair/mobility aids on the lift

18. Training materials – The lift manufacturer shall make training materials available to ensure proper use and maintenance of the lift. These materials may include instructional videos, classroom curriculum, system test results or other related materials.

19. Identification and certification – Each lift shall be permanently and legibly marked or shall incorporate a non-removable label or tag stating that it conforms with all applicable requirements of the current National School Transportation Specifications and Procedures. In addition, the lift manufacturer or an authorized representative shall provide a notarized Certificate of Conformance, either original or photocopied, upon request of the original titled purchaser. The certificate shall state that the lift system meets all the applicable requirements of the current National School Transportation Specifications and Procedures.

C. Vehicle ramp

1. If a ramp is used, it shall be of a sufficient strength and rigidity to support the special device, occupant and attendant(s). The ramp shall be equipped with a protective flange on each longitudinal side to keep the special device on the ramp.

2. The surface of the ramp shall be constructed of non-skid material.

3. The ramp shall be equipped with handles and shall be of a weight and design to permit one person to put the ramp into place and then return it to storage.

4. Ramps used for emergency evacuation purposes may be installed by manufacturers in raised-floor buses. A ramp shall

not be installed as a substitute for a lift when a lift is capable of servicing the need.

REGULAR SERVICE ENTRANCE

A. On power-lift-equipped vehicles, steps shall be the full width of the stepwell excluding the thickness of doors in the open position.

B. A suitable device shall be provided to assist passengers during ingress and egress. This device shall allow for easy grasping or holding, and it shall have no openings or pinch points that might entangle clothing, accessories or limbs.

RESTRAINING DEVICES

A. On power-lift-equipped school buses with a GVWR of 10,000 pounds or more, seat frames may be equipped with attachment points that belt assemblies can be attached to for use with child-safety restraint systems (CSRSs) complying with FMVSS No. 213, *Child Restraint Systems.* Any belt-assembly anchorage shall comply with FMVSS No. 210, *Seat Belt Assembly Anchorages.*

B. Alternatively, a child-restraint anchorage system that complies with FMVSS No. 225, *Child Restraint Anchorage Systems,* may be installed.

C. If installed, seat-belt assemblies shall conform to FMVSS No. 209, *Seat Belt Assemblies.*

D. Child-safety restraint systems, which are used to facilitate the transportation of children who in other modes of transportation would be required to use a child, infant or booster seat, shall conform to FMVSS No. 213.

SEATING ARRANGEMENTS

Flexibility in seat spacing that accommodates special devices shall be permitted to meet passenger requirements. All seating shall meet the requirements of FMVSS No. 222, *School Bus Passenger Seating and Crash Protection.*

SECUREMENT AND RESTRAINT SYSTEM FOR WHEELCHAIRS AND WHEELCHAIR-SEATED OCCUPANTS

For the purposes of understanding the various aspects and components of this section, the terms *securement* and *tiedown* and the phrases *securement system* or *tiedown system* are used exclusively in reference to the devices that anchor the wheelchair to the vehicle. The term *restraint* and the phrase *restraint system* are used exclusively in reference to equipment intended to

limit the movement of the wheelchair occupant in a crash or sudden maneuver. The term *wheelchair tiedown and occupant restraint system (*WTORS*)* is used to refer to the total system that secures the wheelchair and restrains the occupant.

A. WTORS – General requirements

1. A WTORS installed in specially equipped school buses shall be designed, installed and operated for use with forward-facing wheelchair-seated passengers. The WTORS shall comply with all applicable requirements of FMVSS 222, *School Bus Passenger Seating and Crash Protection,* and SAE J2249, *Wheelchair Tiedown and Occupant Restraint Systems for Use in Motor Vehicles.* (**Note**: SAE J2249 is currently being updated and moved to Section 18 of ANSI/RESNA Wheelchair Standards, Volume 4, Wheelchairs and Transportation.)

2. The WTORS, including the anchorage track, floor plates, pockets or other anchorages, shall be provided by the same manufacturer or shall be certified as compatible by manufacturers of all equipment and systems to be used.

3. Wheelchair-securement positions shall be located so that wheelchairs and their occupants do not block access to the lift door.

4. A storage device for the WTORS shall be provided. When the system is not in use, the storage device shall allow for clean storage, shall keep the system securely contained within the passenger compartment, shall provide reasonable protection from vandalism and shall enable the system to be readily accessible for use.

5. The WTORS and the storage device shall meet the flammability standards established in FMVSS No. 302, *Flammability of Interior Materials.*

6. The following information shall be provided with each vehicle that is equipped with a securement and restraint system:

    a. A phone number at which information can be obtained about installation, repair and parts (detailed written instructions and a parts list shall be available upon request)

    b. Detailed instructions regarding use – including a diagram showing the proper placement of wheelchairs/mobility

aids and the positioning of securement devices and occupant restraints, including the correct belt angles

7. The WTORS manufacturer shall make training materials available to ensure proper use and maintenance of the WTORS. These materials may include instructional videos, classroom curriculum, system test results or other related materials.

B. Wheelchair Securement/Tiedown – See 49 CFR 571.403, S5.4.1, S5.4.2.

Each wheelchair position in a specially equipped school bus shall have a minimum clear-floor area of 30 inches laterally by 48 inches longitudinally. Additional floor area may be required for some wheelchairs. Consultation between the user and the manufacturer is recommended to ensure that adequate area is provided.

C. Occupant restraint system – See 49 CFR 571.403, S5.4.3, S5.4.4.

SPECIAL LIGHT

Doorways at which lifts are installed shall be equipped with a special light that provides a minimum of two foot-candles of illumination as measured on the floor of the bus immediately adjacent to the lift during lift operation.

SPECIAL SERVICE ENTRANCE

A. Power-lift-equipped bodies shall have a special service entrance to accommodate the power lift. (**Note:** A special service entrance shall not be required if the lift is designed to operate within the regular service entrance and is capable of stowing so that the regular service entrance is not blocked in any way, and a person entering or exiting the bus is not impeded in any way.)

B. The special service entrance and door shall be located on the right side of the bus and shall be designed so as to not obstruct the regular service entrance. (**Note:** A special service entrance and door may be located on the left side of the bus only if the bus is used only to deliver students to the left side of one-way streets, and its use is limited to that function.)

C. The opening may extend below the floor and through the bottom of the body skirt. If such an opening is used, reinforcements shall be installed at the front and rear of the opening to support the floor and give the same strength as other floor openings.

D. A drip molding shall be installed above the special service entrance to effectively divert water from the entrance.

E. Door posts and headers at the special service entrance shall be reinforced sufficiently to provide support and strength equivalent to the area on the side of the bus not used for the special service entrance.

SPECIAL SERVICE ENTRANCE DOORS

A. A single door or double doors may be used for the special service entrance.

B. A single door shall be hinged to the forward side of the entrance unless this would obstruct the regular service entrance. If the door is hinged to the rearward side of the doorway, the door shall utilize a safety mechanism to prevent it from swinging open if the primary door latch fails. If double doors are used, the system shall be designed to prevent the doors from being blown open by aerodynamic forces created by the forward motion of the bus, and/or it shall incorporate a safety mechanism to provide secondary protection should the primary latching mechanism fail.

C. All doors shall have positive fastening devices to hold the doors in an open position when the special service entrance is in use.

D. All doors shall be weather sealed.

E. When manually-operated dual doors are provided, the rear door shall have at least a one-point fastening device to the header. The forward-mounted door shall have at least three one-point fastening devices. One shall be to the header, one shall be to the floor line of the body and the other shall be into the rear door. The door and hinge mechanism shall have strength that is greater than or equivalent to the strength of the emergency-exit door.

F. Door materials, panels and structural components shall have strength equivalent to the conventional service and emergency doors. Color, rub-rail extensions, lettering and other exterior features shall match the adjacent sections of the body.

G. Each door shall have windows, set in a waterproof manner, that are visually similar in size and location to adjacent non-door windows. Glazing shall be of the same type and tinting (if applicable) as standard fixed glass in other body locations.

H. The door shall be equipped with a device that will actuate an audible or flashing signal in the driver’s compartment when the door is not securely closed and the ignition is in the on position.

I. A switch shall be installed so that the lift mechanism will not operate when the lift-platform door is closed.

J. Special service entrance doors shall be equipped with padding at the top edge of the door opening. The padding shall be at least 3 inches wide and 1 inch thick, and it shall extend the full width of the door opening.

SUPPORT EQUIPMENT AND ACCESSORIES

A. Each specially equipped school bus set up to accommodate wheelchairs or other assistive or restraint devices with belts attached shall contain at least one webbing cutter (see Section 4, Seats and Restraining Barriers) that is properly secured in a location within reach of the driver while he or she belted into the driver's seat. The belt cutter shall be durable and designed to prevent the operator or others from being cut during use.

B. Special equipment or supplies used in the bus for mobility assistance, health support or safety purposes shall meet local, federal and engineering standards that may apply, including requirements for proper identification.

Equipment that may be used for these purposes includes but is not limited to:

1. Wheelchairs and other mobile seating devices (see Section 5, Securement and Restraint System for Wheelchairs and Wheelchair-Seated Occupants)

2. Crutches, walkers, canes and other ambulating devices

3. Medical support equipment – This may include respiratory devices such as oxygen bottles (no larger than 22 cubic feet for liquid oxygen or 38 cubic feet for compressed gas) or ventilators. Tanks and valves should be located and positioned to protect them from direct sunlight, bus heater vents or other heat sources. Other equipment may include intravenous and fluid-drainage apparatus.

C. All portable equipment and special accessory items, including the equipment listed above, shall be secured at the mounting location to withstand a pulling force of five times the weight of the item, or it shall be retained in an enclosed, latched compartment. The compartment shall be capable of withstanding forces applied to its interior equal to five times the weight of its contents without a failure of the box's integrity and securement to the bus. (**Note:** If these specifications provide exact requirements for the securement of a particular type of equipment, such as wheelchairs, the exact specification shall prevail.)

TECHNOLOGY AND EQUIPMENT, NEW

It is the intent of these specifications to accommodate new technologies and equipment that will better facilitate the transportation of students with special needs. New technology or new equipment is acceptable for use in specially equipped vehicles if:

A. It does not compromise the effectiveness or integrity of any major safety system. (Examples of safety systems include but are not limited to compartmentalization, the eight-lamp warning system, emergency exits and the approved color scheme.)

B. It does not diminish the safety of the interior of the bus.

C. It does not create additional risks for students who are boarding or exiting the bus, or who are in or near the school bus loading zone.

D. It does not require undue additional activity and/or responsibility for the driver.

E. It generally increases efficiency and/or the safety of the bus, provides for a safer or more pleasant experience for occupants and pedestrians in the vicinity of the bus, and/or assists the driver in making his or her many tasks easier to perform.

APPENDICES

SCHOOL BUS CHASSIS AND BODY

National School Bus Yellow

The color known as National School Bus Yellow (NSBY) is specified and described in the School Bus Manufacturers Technical Council publication SBMTC-008, *National School Bus Yellow Color Standard.*

Note: Information concerning the purchase of this standard may be obtained from the Executive Director of the National Association of State Directors of Pupil Transportation Services (NASDPTS) at 1-800-585-0340, or send an e-mail to www.nasdpts.org.

Bus Body Heating System Test

1. Scope

This procedure, limited to liquid coolant systems, establishes uniform cold weather bus vehicle heating system test procedures for all vehicles designed to transport ten (10) or more passengers. Required test equipment, facilities and definitions are included. Defrosting and defogging procedures and requirements are established by SAE J381, *Windshield Defrosting Systems Test Procedure and Performance Requirements—Trucks, Buses, and Multipurpose Vehicles,* and SAE J382, *Windshield Defrosting Systems Performance Guidelines—Trucks, Buses, and Multi-Purpose Vehicles,* which are hereby included by reference.

1.1 Purpose

This procedure is designed to provide bus manufacturers with a cost-effective, standardized test method to provide relative approximations of cold weather interior temperatures.

2. Definitions

2.1 Heat Exchanger System - Means will exist for providing heating and windshield defrosting, and defogging, capability in a bus. The system shall consist of an integral assembly, or assemblies, having a core assembly or assemblies, blower(s), fan(s), and necessary duct systems and controls to provide heating, defrosting and defogging functions. If the bus body structure makes up some portion of the duct system, this structure or a simulation of this structure, must be included as part of the system.

2.2 Heat Exchanger Core Assembly - The core shall consist of a liquid-to-air heat transfer surface(s), liquid inlet and discharge tubes or pipes.

2.3 **Heat Exchanger-Defroster Blower -** An air moving device(s) compatible with energies available on the bus body.

2.4 **Coolant -** A 50-50 solution of commercially available glycol antifreeze and commercial purity water. Commercial purity water is defined as "that obtained from a municipal water supply system."

2.5 **Heat Exchanger-Defroster Duct System -** Passages that conduct inlet and discharge air throughout the heater system. The discharge outlet louvers shall be included as part of the system.

2.6 **Heater Test Vehicle -** The completed bus as designed by the manufacturer with or without a chassis, engine and driver train, including the defined heat exchanger system. If the vehicle is without a chassis, it shall be placed on the test site in such a way that the finished floor of the body is at a height, from the test site floor, equal to its installed height when on a chassis, and all holes and other openings normally filled when installed on a chassis will be plugged.

2.7 **Heat Transfer -** The transfer of heat from liquid to air is directly proportional to the difference between the temperatures of the liquid and air entering the transfer system, for a given rate of liquid and air flow measured in pounds per minute, and that heat removed from liquid is equal to heat given to air.

3. Equipment

3.1 **Test Site** -A suitable location capable of maintaining an average ambient temperature not to exceed 25°F (-3.9°C) for the duration of the test period. The maximum air velocity across the vehicle shall be 5 mph (8 kph).

3.2 **Coolant Supply -** closed loop system, independent of any engine/drive train system, capable of delivering a 50-50 (by volume) solution of antifreeze-water, as defined in 2.4, at 150°±5° (65.5°±1.7°C) above the test site ambient temperature, and 50 lbs (22.7 kg) per minute flow. The coolant supply device shall be equipped with an outlet diverter valve to circulate coolant within the device during its warmup period. The valve will then permit switching the coolant supply to the bus heat exchanger system at the start of the test.

3.3 **Power Equipment Supply -** A source capable of providing the required test voltage and current for the heater system.

3.4 **Heat Exchange Units -** The heat exchangers used shall be labeled as specified by the School Bus Manufacturers Technical Council Standard No. 001, *Procedure for Testing and Rating Automotive Bus Hot Water and Heating and Ventilating Equipment* (Revised 4/94). The test rating of each unit, and quantity used, shall be recorded.

4. Instrumentation

4.1 Air Temperature

4.1.1 Interior - Recommended air temperature measuring instrumentation are thermocouples or resistance temperature detectors (RTDs). Thermometers are not recommended because of their slow response to rapid temperature changes. Measuring instrumentation shall be placed on alternate seat rows beginning 39±5 inches (99±13 cm) from the rear of the body, at 36±2 inches (91±5 cm) from the finished floor of the body, and on the longitudinal centerline of the body.

4.1.2 Ambient - A set of four electrically averaged temperature measuring devices shall be placed 18±5 inches (46±13 cm) from the nearest body surface, 96±5 inches (243±13 cm) above the floor of test site. One measuring device shall be placed at each of the following locations:

1) Midline of body forward of windshield;
2) Midline of body aft of the rear surface; and
3) Midway between the axles on the right and left sides of the body.

4.1.3 Driver - Measuring devices shall be placed at appropriate locations to measure ankle, knee, and breath level temperatures with the driver's seat in rearmost, lowest and body center-most position.

(1) Ankle Level - Place a minimum of four electrically averaged temperature measuring devices at the corners of a 10x10 inches (25x25cm) square area, the rearmost edge of which begins 8 inches (20 cm) forward of the front edge of, and centered on, the seat cushion. The devices shall be located 3±0.5 inches (7.5±1.3 cm) above floor surface.
(2) Knee Level - Place a minimum of one measuring device at the height of the front top edge of the seat cushion and on the centerline of the seat. This measurement shall be 4±1 inches (10±2.5 cm) forward of the extreme front edge of the seat cushion and parallel to the floor.
(3) Breath Level - Place a minimum of one measuring device 42±2 inches (107±5 cm) above the floor and 10±2 inches (25±5 cm) forward of the seat back. The forward dimension shall be measured from the upper edge of the seat back and parallel to the floor.

4.1.4 (Optional) Heat Exchanger Inlet and Outlet Temperature - A minimum of four electrically averaged temperature measuring devices shall be used to measure the inlet air temperature of each heat

exchange unit. Additionally, a minimum of four electronically averaged temperature measuring devices shall be used to measure the outlet air temperature of each heat exchange unit. These sensors shall be placed no closer than 2.0 inches (5.1 cm) from the face of any heater core, to prevent any incidence of radiant heat transfer. Outlet sensors shall be distributed throughout the outlet air stream(s) 1.0±0.25 inches (2.5±0.6 cm) from the outlet aperture(s) of the unit heater.

4.1.5 (Optional) Defrost Air Temperature - The temperature of the defrost air shall be measured at a point in the defroster outlet(s) that is in the main air flow and which is at least 1.0 inch (2.54 cm) below (upstream of) the plane of the defroster outlet opening. At least one temperature measurement shall be made in each outlet unit. The interior surface temperature(s) of the windshield shall be measured at a point located on the vertical and horizontal centerline(s) of the windshield.

4.1.6 (Optional) Entrance Area Temperature - The temperature of the vehicle entrance area shall be measured by two sets of three each electrically averaged temperature measuring devices. One set of three devices shall be placed 1.0 inch (2.54 cm) above the lowest tread of the entrance step, equally spaced on the longitudinal centerline of the tread. The second set of devices shall be placed on the next horizontal surface above the lowest entrance step, 4.0 inches (10.2 cm) from the outboard edge of that surface, spaced identically to the first set of sensors, and placed parallel with the outboard edge of the surface being measured.

4.2 Coolant Temperature - The temperature entering and leaving the heat exchanger/defroster system shall be measured as close to the entrance and exit points of the bus body as possible with an immersion thermocouple or RTD device which can be read within ±0.5°F (±0.3°C).

4.3 Coolant Flow - The quantity of coolant flowing shall be measured by means of a calibrated flow meter or weighing tank to an accuracy of at least 2% of setpoint.

4.4 Coolant Pressure - The coolant differential pressure shall be measured by suitable connection as close as possible to the inlet and outlet of the heat exchanger/defrosting system. Pressure may be read as inlet and outlet pressure and the differential calculated, or read directly as PSID. Pressure readings shall be made with the use of gauges, manometers or transducers capable of reading within ±0.1 psi (689.5 Pa), accurate to ±0.5% of full scale.

4.5 Additional Instrumentation - Additional instrumentation required for vehicle heat exchanger system testing is a voltmeter and a shunt-type ammeter to read the voltage and current of the complete system. The

ammeter and voltmeter shall be capable of an accuracy of ±1% of the reading.

5. **Test Procedures -** Install the heater test vehicle on the test site. Testing shall be conducted in such a way as to prevent the effects of solar heating. At an outdoor test site, testing shall commence and data shall be recorded during the hours following sunset and prior to sunrise, regardless of cloud cover or facility roof. Instrumentation is required to obtain the following readings:

(a) Vehicle interior (4.1.1)
(b) Inlet coolant temperature, at entrance to the bus body (4.2)
(c) Discharge coolant temperature, at exit from the bus body (4.2)
(d) Ambient temperature (4.1.2)
(e) Rate of coolant flow (4.3)
(f) Coolant flow pressure (4.4)
(g) Elapsed time (stop watch)
(h) Driver's station temperatures (4.1.3)
(i) (Optional) Heat Exchanger Inlet and Outlet Temperatures (4.1.4)
(j) (Optional) Defrost Air Temperature (4.1.5)
(k) (Optional) Entrance Area Temperature (4.1.6)

Soak the test vehicle, with doors open, for the length of time necessary to stabilize the interior temperature for a 30 minute period as recorded by the vehicle interior temperature measuring devices, and the coolant temperature as measured by the inlet and outlet coolant temperature measuring devices, at the test site temperature, ±5°F (±2.5°C), not to exceed 25°F (-3.9°C). Warm up the coolant device to the test temperature immediately prior to the start of the test. Use the coolant supply outlet diverter valve to prevent heated coolant from entering the bus heating system prior to the start of the test. At this time, set the heater controls and all fan controls at maximum, close all doors. A maximum of two windows may be left open a total of 1.0 inch (2.5 cm) each. A maximum of two occupants may be in the body during the test period. Record all instrumentation readings at five minute intervals for a period of 1 hour. Recording time shall begin with the initial introduction of heated coolant from the independent coolant supply. The electrical system shall be operated at a maximum of 115% of nominal system voltage ±0.2 volts, for example: 13.8 VDC ±0.2 volts for a 12 volt (DC) system, and the heat exchanger system shall be wired with the normal vehicle wiring.

Optional - Additional flow rates and/or coolant temperatures may also be used to generate supplementary data. Procedure shall be repeated (See 5. Test Procedure) for each additional flow rate and/or coolant temperature.

6. Computations

6.1 Chart and Computations - Customary Units-Data shall be recorded on Chart 6.1, or equivalent. Temperature data shall be recorded at the actual temperatures occurring at the time of testing. Air temperature data shall then be adjusted to a 0°F base prior to the construction of graphs. This data reduction shall be directly proportional to the

difference between the actual ambient temperature, at the time of test, and 0°F (i.e., actual ambient of 18°F shall result in a reduction of all air temperatures by 18°F and actual ambient temperature of -8°F shall result in an increase of all air temperatures by 8°F). Temperature data shall be presented in graph form as well as tabular form. One graph shall be constructed for the body interior air temperatures (4.1.1) wherein the recording intervals shall be the X-axis and the °F the Y-axis. A separate graph shall be constructed for the driver's temperatures (4.1.3) using the same units for the axes. Optional temperature data (4.1.4, 4.1.5, 4.1.6) may be similarly graphed separate from the interior data.

6.1.1 Optional Computations BTU/Hr. Coolant

Heat Transfer: $Q_w = C_p W_w (T_{in} - T_{out}) \times 60$ where:

1. W_w = Flow of Coolant (lb/min) — *measured to ± 2 percent.*
2. T_{in} = Temperature of Coolant into System (°F) — *measured quantity.*
3. T_{out} = Temperature of Coolant out of System (°F) — *measured quantity.*
4. Q_w = Heat removed From Coolant (Btu/hr) — *calculated quantity.*
5. C_p = Specific Heat of Coolant = 0.8515 (BTU/lb/°F) — *given quantity.*

6.2 **Chart and Computations -** Metric Units - Data shall be recorded on Chart 6.2, or equivalent. Temperature data shall be recorded at the actual temperatures occurring at the time of testing. Air temperature data shall then be adjusted to a -18°C base prior to the construction of graphs. This data reduction shall be directly proportional to the difference between the actual ambient temperature, at the time of test, and -18°C (i.e., actual ambient of -7.8°C shall result in a reduction of all air temperatures by 10.2°C and actual ambient temperature of -22.2°C shall result in an increase of all air temperatures by 4.2°C). Temperature data shall be presented in graph form as well as tabular form. One graph shall be constructed for the body interior air temperatures (4.1.1) wherein the recording intervals shall be the X-axis and °C the Y-axis. A separate graph shall be constructed for the driver's temperatures (4.1.3) using the same units for the axes. Optional temperature data (4.1.4, 4.1.5, 4.1.6) may be similarly graphed separate from the interior data.

6.2.1 Optional Computations BTU/Hr – Coolant

Heat Transfer: $Q_w = C_p W_w (T_{in} - T_{out}) \times 60$ where:

1. W_w = Flow of Coolant (kg/min) — *measured to ± 2 percent.*
2. T_{in} = Temperature of Coolant into System (°C) — *measured quantity.*
3. T_{out} = Temperature of Coolant out of System (°C) — *measured quantity.*
4. Q_w = Heat removed From Coolant (Joules/hr) — *calculated quantity.*
5. C_p = Specific Heat of Coolant = 3559 (joule/kg/ºC) — *given quantity.*

Chart 6.1-Optional Measurements

Readings/Calculations	0	5	10	15	20	25	30	35	40	45	50	55	60
T11-Windshield CL Left- °F													
T12-Windshield CL Right- °F													
T13-Defrost Outlet Left- °F													
T14-Defrost Outlet Right °F													
T15-Heater-Inlet °F													
T15-Heater-Outlet °F													
T16-Heater-Inlet °F													
T16-Heater-Outlet °F													
T17-Heater-Inlet °F													
T17-Heater-Outlet °F													
T18-Heater-Inlet °F													
T18-Heater-Outlet °F													
T19-1st Entrance Step													
T20-2nd Entrance Step													
Heat Transfer-BTU/Hr-coolant													

COMPUTATIONAL CHART 6.1-Optional (Fahrenheit)

Chart 6.2

Description of Unit _____

Purpose of Test _____

Date Location Observers

Readings/Calculations Water		5	10	15	20	25	30	35	40	45	50	55	60
Flow-kg/min													
Flow Pressure-PaD													
T-in °C													
T-out °C													
Air Temperature													
T1 rear- °C													
T2- °C													
T3- °C													
T4- °C													
T5- °C													
T6-front- °C													
T7-ambient- °C													
T8-Driver Ankle- °C													
T9-Driver Knee- °C													
T10-Driver Breath-°C													
Electrical System													
Volts													
Amps													

COMPUTATIONAL CHART 6.2 (Celsius)

Chart 6.2-Optional Measurements

Readings/Calculations	0	5	10	15	20	25	30	35	40	45	50	55	60
T11-Windshield CL Left- °C													
T12-Windshield CL Right- °C													
T13-Defrost Outlet Left- °C													
T14-Defrost Outlet Right °C													
T15-Heater-Inlet °C													
T15-Heater-Outlet °C													
T16-Heater-Inlet °C													
T16-Heater-Outlet °C													
T17-Heater-Inlet °C													
T17-Heater-Outlet °C													
T18-Heater-Inlet °C													
T18-Heater-Outlet °C													
T19-1st Entrance Step													
T20-2nd Entrance Step													
Heat Transfer-J/Hr-coolant													

COMPUTATIONAL CHART 6.2-Optional (Celsius)

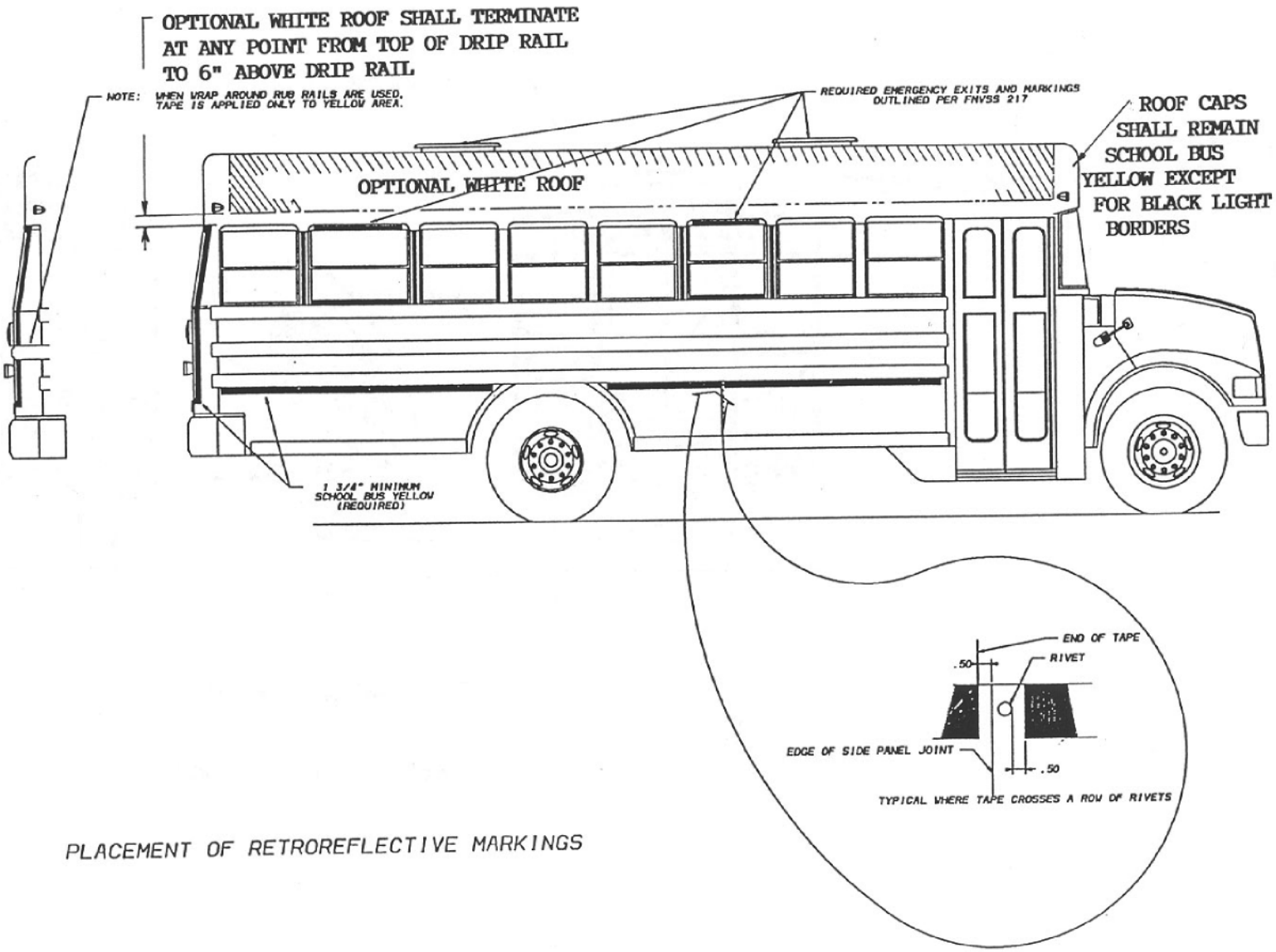

PLACEMENT OF RETROREFLECTIVE MARKINGS

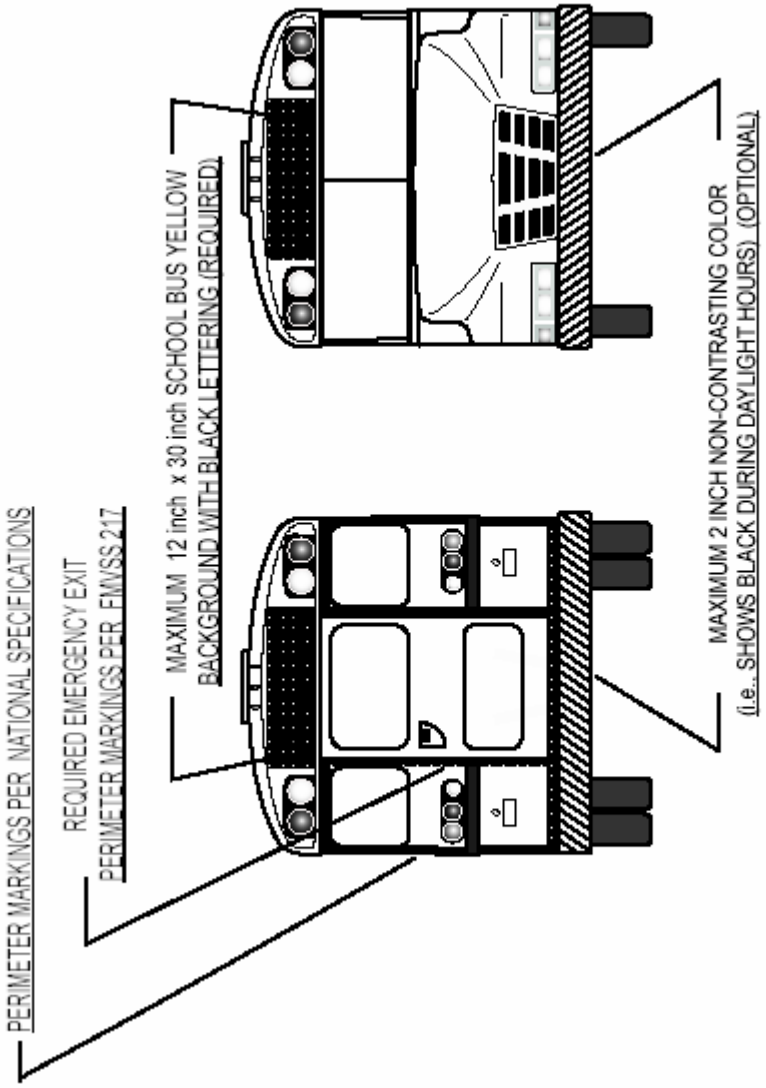

PLACEMENT OF RETROREFLECTIVE MARKINGS

NOISE TEST PROCEDURE

A. The vehicle is located so that no other vehicle or signboard, building, hill or other large reflecting surface is within 15.2 m (50 feet) of the occupant's seating position.

B. All vehicle doors, windows and ventilators are closed.

C. All power-operated accessories are turned off.

D. The driver is in the normal seated driving position and the person conducting the test is the only other person in the vehicle.

E. A sound level meter is used that is set at the "A-weighting fast" meter response and meets the requirements of:

1. The American National Standards Institute, Standard ANSI S1.4-1971: *Specifications for Sound Level Meters,* for Type 1 Meters; or

2. The International Electrotechnical Commission (IEC), Publication No. 179 (1973): *Precision Sound Level Meters.*

F. The microphone is located so that it points vertically upward 6 inches to the right and directly in line with, and on the same plane as, the occupant's ear, adjacent to the primary noise source.

G. If the motor vehicle's engine radiator fan drive is equipped with a clutch or similar device that automatically either reduces the rotational speed of the fan or completely disengages the fan from its power source in response to reduced engine cooling loads, the vehicle may be parked before testing with its engine running at high idle or any other speed the operator chooses for sufficient time, but not more than 10 minutes, to permit the engine radiator fan to automatically disengage.

H. With the vehicle's transmission in neutral gear, the engine is accelerated to:

1. Its maximum governed speed, if it is equipped with an engine governor; or

2. Its speed at its maximum rated horsepower, if it is not equipped with an engine governor, and the engine is stabilized at that speed.

I. The A-weighted sound level reading on the sound level meter for the stabilized engine speed condition referred to in H.1. or H.2., above, is observed and, if it has not been influenced by extraneous noise sources, is recorded.

J. The vehicle's engine speed is returned to idle and the procedures set out in paragraphs H. and I. are repeated until 2 maximum sound levels within 2 dBA

of each other are recorded. The 2 maximum sound level readings are then averaged; and

K. The average obtained in accordance with paragraph J., with a value of 2 dBA subtracted therefrom to allow for variations in the test conditions and in the capabilities of meters, is the vehicle's interior sound level at the driver's seating position for the purposes of determining compliance with the requirements of this test procedure.

Retroreflective Sheeting Daytime Color Specification

The daytime color of the RETROREFLECTIVE sheeting used to enhance school bus safety requires different color tolerances in order to assure optimum safety benefit, as well as to be consistent with the color of the school bus.

The color of the RETROREFLECTIVE sheeting shall conform to the table below when samples applied to aluminum test panels are measured as specified in ASTM E1164. For colorimetric measurements, material is illuminated by Standard Illuminant D65 at an angle of 45 degrees with the normal to the surface the observations are made in the direction of the normal (45/0 degree geometry). The inverse (0/45 degree geometry) with the illuminant at the normal to the surface and the observations at 45 degrees with the normal to the surface may also be used. For materials which are directionally sensitive (e.g., prismatic sheeting), the colorimetric measurements are made using circumferential illumination and viewing and the various measurements are averaged. Calculations shall be done in accordance with ASTM E308 using the CIE 1931 (2 degree) Standard Observer.

Retroreflective Sheeting Daytime Color

Chromaticity Coordinates of Corner Points
Determining the Permitted Color Area

	1	2	3	4
Yellow X	0.484	0.513	0.517	0.544
Y	0.455	0.426	0.482	0.455

Luminance Factor (Y%)	Minimum	10.0
	Maximum	36.0

School Bus Seat Upholstery Fire Block Test

A. Test Chamber

Cross Section

The suggested test chamber is the same cross section as the bus body in which seats are used with the rear section on each end. If a bus section is not used, the cross section is to be 91±1 inch in width x 75 inches ±3 inches in height. There shall be a door, which does not provide ventilation, in the center of each end of the test chamber. The doors shall be 38±3 inches in width and

53±3 inches in height and include a latch to keep the doors closed during the test. (See Figure 1.)

Length

The length of the test chamber shall allow three rows of seats at the minimum spacing recommended by the installer. (See Figure 1, Detail A.)

In order that different types of seats may be tested in the same chamber, a length tolerance of plus 45 inches is allowed.

Ventilation

One ventilation opening shall be in each end of the test chamber and shall be 325 square inches ±25 square inches. The bottom of the opening shall be 30 inches ±3 inches above the chamber floor. Ventilation openings shall be on the same side of the test chamber. (See Figure 1.)

There shall be no ventilation openings along the length of the test chamber.

A forced-air ventilation system may not be used.

Baffles shall be used to prevent wind from blowing directly into the ventilation openings.

Camera View Area

An opening covered with glass shall be provided at the midpoint of the test chamber length for camera viewing. The opening shall allow the camera to view the seat parallel to the seat width. (See Figure 1.)

A. Test Sample

The sample shall be a fully-assembled seat.

Record the weight of all padding and upholstery prior to assembly. Record the weight of the fully-assembled seat.

B. Ignition Source

A paper grocery bag with dimensions of approximately 7x11x18 inches is used to contain double sheets of newsprint (black print only, approximately 22x28inches). The total combined weight of bag and newspaper shall be seven ounces ±0.5 ounces.

C. Test Procedure

1. Install three seats in the test chamber at minimum spacing, per installer recommendation. Seats shall be perpendicular to the dimension indicated as “length” in Figure 1. Install so that seat frames will not fall during the test. Seat width shall be determined so that maximum

passenger capacity per row (two seats) for the seat style shall be tested.

2. For each test, position the ignition source in the following positions outlined.

Figure 1

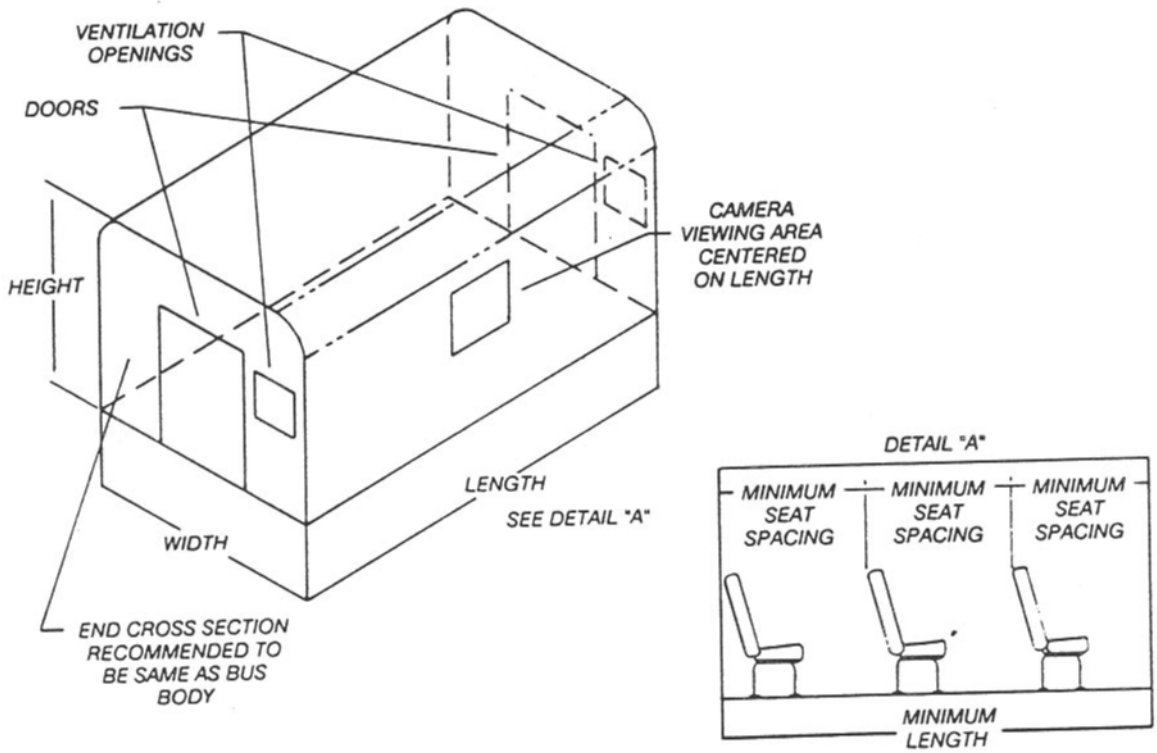

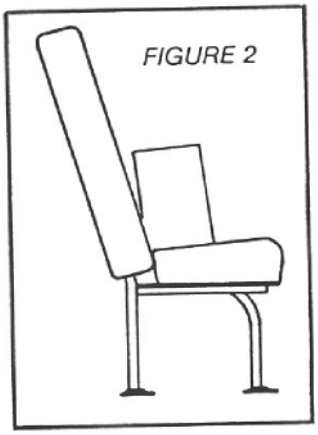

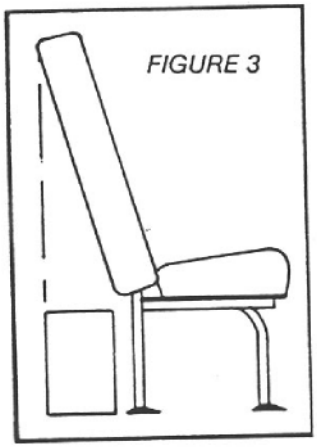

214

Position A.
Position ignition source with 18-inch dimension in contact with the seat cushion and touching the seat back. Center the bag on top of the cushion. (See Figure 2.)

Position B.
Position the ignition source on the floor behind the seat with 18-inch side resting on floor and parallel to seat width, centered
on width so that the rear of bag does not extend beyond the rear seat back. (See Figure 3.)

Position C.
Position the ignition source on the floor on the aisle side of the sea with 18-inch dimension on the floor and perpendicular to the seat width touching the seat leg with centerline of the bag at the center of the seat back. (See Figure 4.)

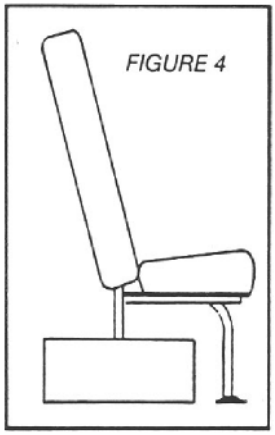

3. A wooden match shall be used to light the ignition source. Time the test, beginning when the ignition source is on fire and ending when all flames are out.

4. After each ignition source position test, weigh seat assembly, including loose material which has fallen off the seat onto the floor.

D. Performance Criteria

For each ignition source position test, the seat tested must meet all of the following criteria. A new seat specimen may be used for each ignition source position test.

1. Maximum time from ignition to flameout shall be 8 minutes.

2. Flame shall not spread to any other seat with the ignition source in Position A and Position C.

3. Weight loss may not exceed 10% of the pretest weight of padding and upholstery.

2007 Missouri Minimum Standards for School Buses Committee

Mr. Tom Quinn
State Director of Transportation
MO Dept. of Education

Mrs. Debra Clink
School Transportation Consultant
MO Dept. of Education

Ms. Stephanie Brooks
Supervisior for Administrative Services
MO Dept. of Education

Mrs. Shirley Francis
Retired School Transportation Director

Lt. David Perkins
Motor Vehicle Inspection Div. Director
Missouri State Highway Patrol

Mr. Michael Brown
Transportation Director
Springfield R-XII

Mr. Mike Skeen
Transportation Director
Hannibal 60 School District

Mr. Jerry Schwartz
Owner
Schwartz Bus Services

Mr. Jerry Sides
General Manager
MV Student Transportation

Mr. Donnie Fowler
President
Fowler Bus Company

Dr. Nick Boren
Superintendent
South Callaway R-III

Roy Kramme
Assistant Superintendent
Union R-XI School District

Mr. David Wilson
Regional Sales Manager
Midwest Transit Equipment

Mr. Jeff Reitz
Vice President, Sales and Marketing
Central Bus Sales Inc