Missouri Assessment Program
Spring 2006

Mathematics

Anchor Pages for Released Items

Grade 8

Copyright © 2006 by the Missouri State Department of Elementary and Secondary Education.

4 Look at the pattern of geometric figures below. Each geometric shape in each figure is congruent. Figure 1 is labeled with the lengths of the sides.

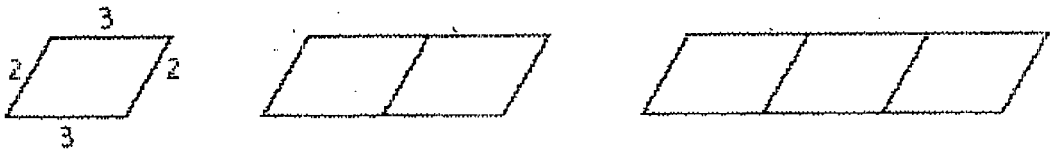

Figure 1 Figure 2 Figure 3

Complete the table below to show the perimeter for the first six figures in the pattern.

Figure	Perimeter
1	10
2	16
3	22
4	28
5	34
6	40

On the line below, write a rule that describes how to find the perimeter of any figure in this pattern after figure 1.

Add six to the previous perimeter.

MAP 2006 Operational
Grade 8 Math
Session 1 Item 4
Score: 2 Anchor
Correct Chart
Correct explanation. Student specifically states to add 6 to the perimeter.

4 Look at the pattern of geometric figures below. Each geometric shape in each figure is congruent. Figure 1 is labeled with the lengths of the sides.

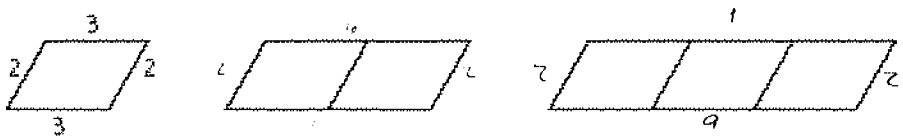

Figure 1 Figure 2 Figure 3

Complete the table below to show the perimeter for the first six figures in the pattern.

Figure	Perimeter
1	10
2	16
3	22
4	28
5	34
6	40

On the line below, write a rule that describes how to find the perimeter of any figure in this pattern after figure 1.

keep adding 6

MAP2006 Operational
Grade 8 Math
Session 1 Item 4
Score : 1 Anchor
Correct chart
Insufficient explanation. Add 6 to what?

4 Look at the pattern of geometric figures below. Each geometric shape in each figure is congruent. Figure 1 is labeled with the lengths of the sides.

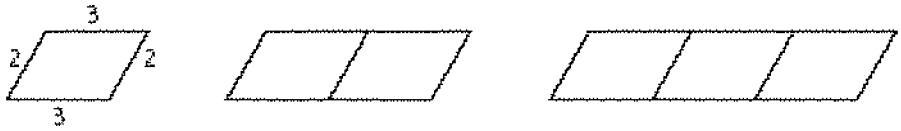

Figure 1 Figure 2 Figure 3

Complete the table below to show the perimeter for the first six figures in the pattern.

Figure	Perimeter
1	10
2	16
3	22
4	28
5	34
6	36

On the line below, write a rule that describes how to find the perimeter of any figure in this pattern after figure 1.

Add all the sides up and thats the perimeter

MAP 2006 Operational
Grade 8 Math
Session 1 Item 4
Score : 0 Anchor
Incorrect chart
Incorrect explanation. Student describes perimeter, not a rule.

7 Joe has a sales job that pays him $3,000 per month and he also earns 10% of his monthly sales as a commission.

On the line below, write an expression that can be used to find Joe's total earnings for a month. Let *d* represent his sales for the month, in dollars.

expression 3000+0.1d

One month Joe's total sales were $34,000. What was the amount of Joe's earnings for that month?

$ 6,400

MAP 2006 Operational
Grade 8 Math
Session 1 Item 7
Score Pt. 2 ANCHOR
Correct answer (6,400)
Correct expression written. Student uses correct order of operations.

7 Joe has a sales job that pays him $3,000 per month and he also earns 10% of his monthly sales as a commission.

On the line below, write an expression that can be used to find Joe's total earnings for a month. Let *d* represent his sales for the month, in dollars.

expression $d + 10\%$

One month Joe's total sales were $34,000. What was the amount of Joe's earnings for that month?

$ 6,400

MAP 2006 Operational
Grade 8 Math
Session 1 Item 7
Score Pt. 1 ANCHOR
Correct answer (6,400)
Incorrect expression written.

7 Joe has a sales job that pays him $3,000 per month and he also earns 10% of his monthly sales as a commission.

On the line below, write an expression that can be used to find Joe's total earnings for a month. Let *d* represent his sales for the month, in dollars.

expression 3000 + d ÷ 10%

One month Joe's total sales were $34,000. What was the amount of Joe's earnings for that month?

$ 4,000

MAP 2006 Operational
Grade 8 Math
Session 1 Item 7
Score Pt. 0 ANCHOR
Incorrect answer (4,000)
Incorrect expression. Student divides d by 10% instead of multiplying.

12 Based on theoretical probability, if a coin is tossed 1,000 times, what would be the expected number of heads and number of tails? In the box below, write your answer and explain your reasoning.

$\frac{1}{2}$ would be the probability because you would hit either heads or tails half the time. $\frac{1}{2}$ of 1,000 is 500 so 500 for both.

500 heads 500 tails

Map 2006 Operational
Grade 8 Math
Session 1 Item 12
Score Point 2 Anchor
Correct answers for both heads and tails (500)
Valid explanation. "You would hit heads or tails half the time".

8M-B-1-10-001

12 Based on theoretical probability, if a coin is tossed 1,000 times, what would be the expected number of heads and number of tails? In the box below, write your answer and explain your reasoning.

500 heads 500 tails

Map 2006 Operational
Grade 8 Math
Session 1 Item 12
Score Pt 1 Anchor
Correct answers for heads and tails (500).
No explanation given.

8M-B-1-10-024

12 Based on theoretical probability, if a coin is tossed 1,000 times, what would be the expected number of heads and number of tails? In the box below, write your answer and explain your reasoning.

There is a bigger chance of getting heads then tails.

50 heads 49 tails

Map 2006 Operational
Grade 8 Math
Session 1 Item 12
Score Pt 0 Anchor
Incorrect answers for heads (50) and tails (49)
Invalid explanation for reasoning.

8M-B-1-10-039

17 Points A and B shown on the coordinate grid below represent two vertices of a right triangle.

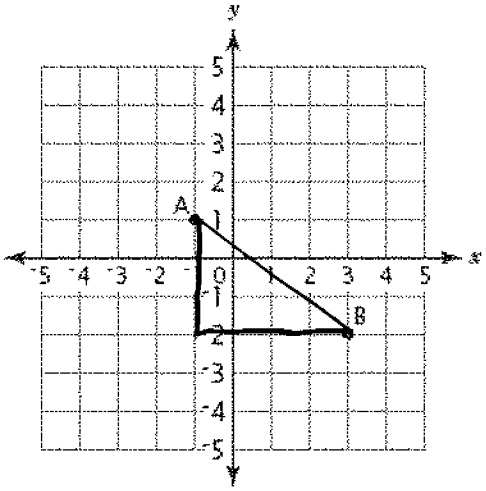

A line drawn between points A and B forms the hypotenuse of the right triangle. What are two different sets of coordinates for point C that could complete the right triangle ABC ?

(3, 1) or (-1, -2)

In the box below, find the length of the hypotenuse, in units, and write your answer on the line.

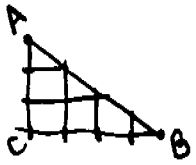

5 units

MAP 2006 Operational
Grade 8 Math
Session 1 Item 17
Score Pt. 2 ANCHOR
Correct coordinates for C (3,1 & -1,-2)
Correct number of units (5). No process needs to be shown for student to receive credit.

17 Points A and B shown on the coordinate grid below represent two vertices of a right triangle.

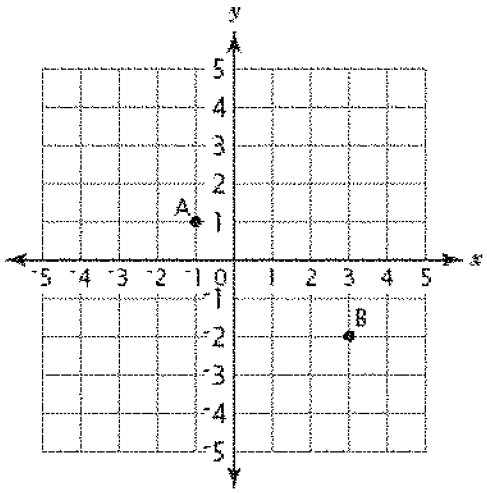

A line drawn between points A and B forms the hypotenuse of the right triangle. What are two different sets of coordinates for point C that could complete the right triangle ABC ?

(3, 1) or (-1, -2)

In the box below, find the length of the hypotenuse, in units, and write your answer on the line.

7 units

MAP 2006 Operational
Grade 8 Math
Session 1 Item 17
Score Pt. 1 ANCHOR
Correct C' coordinates (3,1 & -1,-2)
Incorrect number of units (7)

17 Points A and B shown on the coordinate grid below represent two vertices of a right triangle.

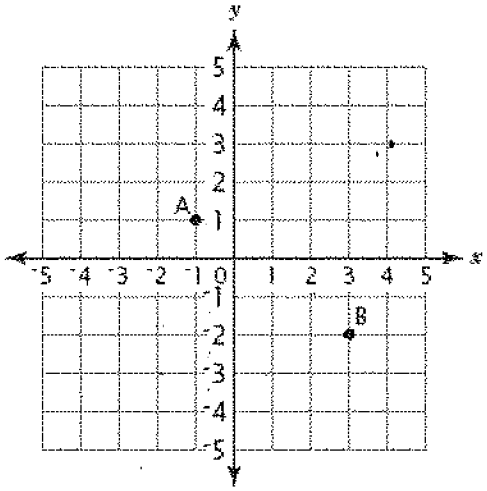

A line drawn between points A and B forms the hypotenuse of the right triangle. What are two different sets of coordinates for point C that could complete the right triangle ABC ?

(4 , 3) or (-3 , -3)

In the box below, find the length of the hypotenuse, in units, and write your answer on the line.

4 units

MAP 2006 Operational
Grade 8 Math
Session 1 Item 17
Score Pt. 0 ANCHOR
Incorrect C' coordinates (4,3 & -3,-3)
Incorrect number of units (4)

22 A transformation of trapezoid ABCD over the line results in image A'B'C'D' as shown on the grid below.

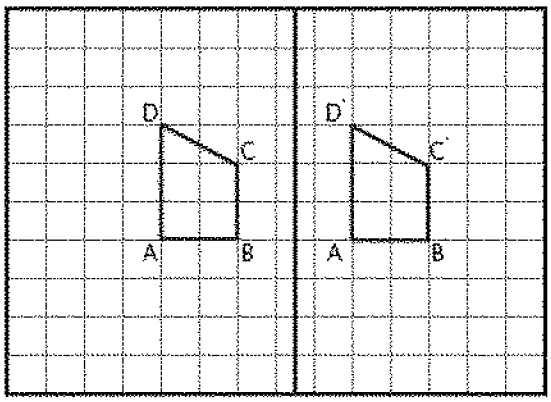

On the line below, name the transformation of trapezoid ABCD.

Slide

On the grid below, draw the reflection of the trapezoid over the line.

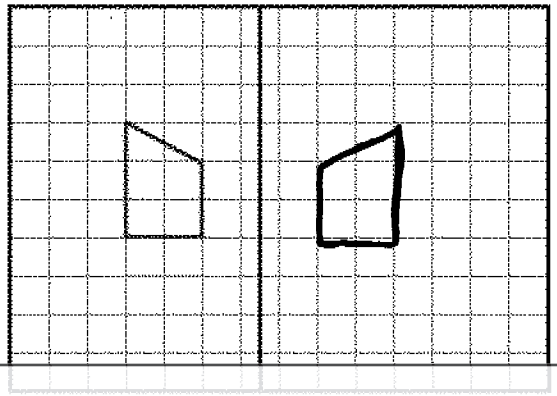

MAP 2006 Operational
Grade 8 Math
Session 1 Item 22
Score : 2 Anchor
Correct transformation named
Correct reflection drawn

22 A transformation of trapezoid ABCD over the line results in image A'B'C'D' as shown on the grid below.

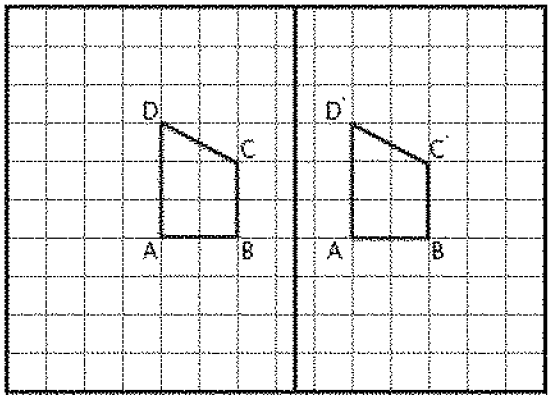

On the line below, name the transformation of trapezoid ABCD.

Slide

On the grid below, draw the reflection of the trapezoid over the line.

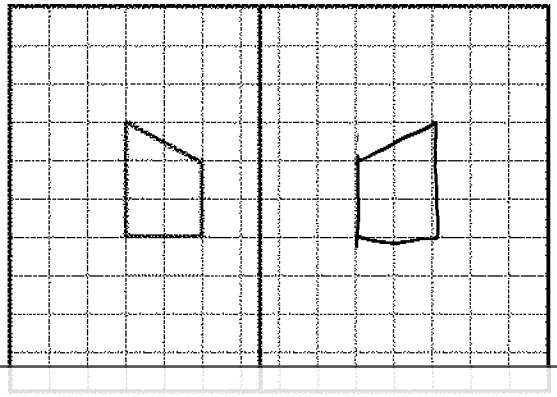

MAP 2006 Operational
Grade 8 Math
Session 1 Item 22
Score : 1 Anchor
Correct transformation named
Incorrect reflection drawn

22 A transformation of trapezoid ABCD over the line results in image A'B'C'D' as shown on the grid below.

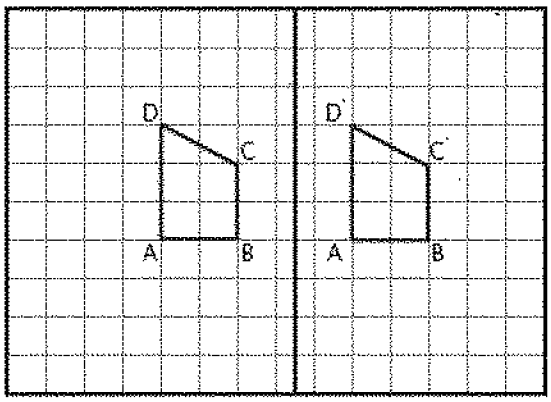

On the line below, name the transformation of trapezoid ABCD.

TRapezoids

On the grid below, draw the reflection of the trapezoid over the line.

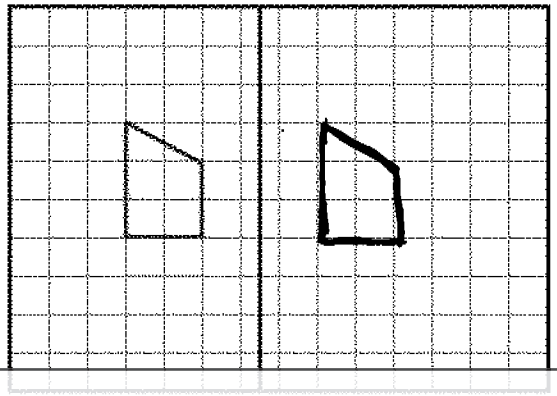

MAP 2006 Operational
Grade 8 Math
Session 1 Item 22
Score : 0 Anchor
Incorrect transformation named, only a shape
Incorrect reflection drawn

27

MAP 2006 Operational
Grade 8 Math
Session 1 Item 27
Score Pt. 2 ANCHOR
Correct answer (60)
Correct process. Student multiplies the mean of 30 x 7days= 210 total minutes. Then adds the total times for the 6 days shown (150). Subtracts 210-150 & arrives at the correct answer (60).

How many minutes will Alison need to practice on Saturday to have a mean of 30 minutes of practice for the week? In the box below, write your answer and provide the work that shows how you arrived at your answer.

$30 \times 7 = 210$
-150
60

20
15
30
40
25
+ 20
150

60 minutes

27

MAP 2006 Operational
Grade 8 Math
Session 1 Item 27
Score Pt. 1 ANCHOR
Correct answer (60)
Incomplete process. Student shows no support for the number 150.

How many minutes will Alison need to practice on Saturday to have a mean of 30 minutes of practice for the week? In the box below, write your answer and provide the work that shows how you arrived at your answer.

150 + 60 = 210 7)210 = 30

60 minutes

27

MAP 2006 Operational
Grade 8 Math
Session 1 Item 27
Score Pt. 0 ANCHOR
Incorrect answer (25)
Incorrect process. Student adds the six numbers given (=150) then divides by six.

How many minutes will Alison need to practice on Saturday to have a mean of 30 minutes of practice for the week? In the box below, write your answer and provide the work that shows how you arrived at your answer.

20
15
30
40
25
+20
150

150 ÷ 6 = 25

25 minutes

30

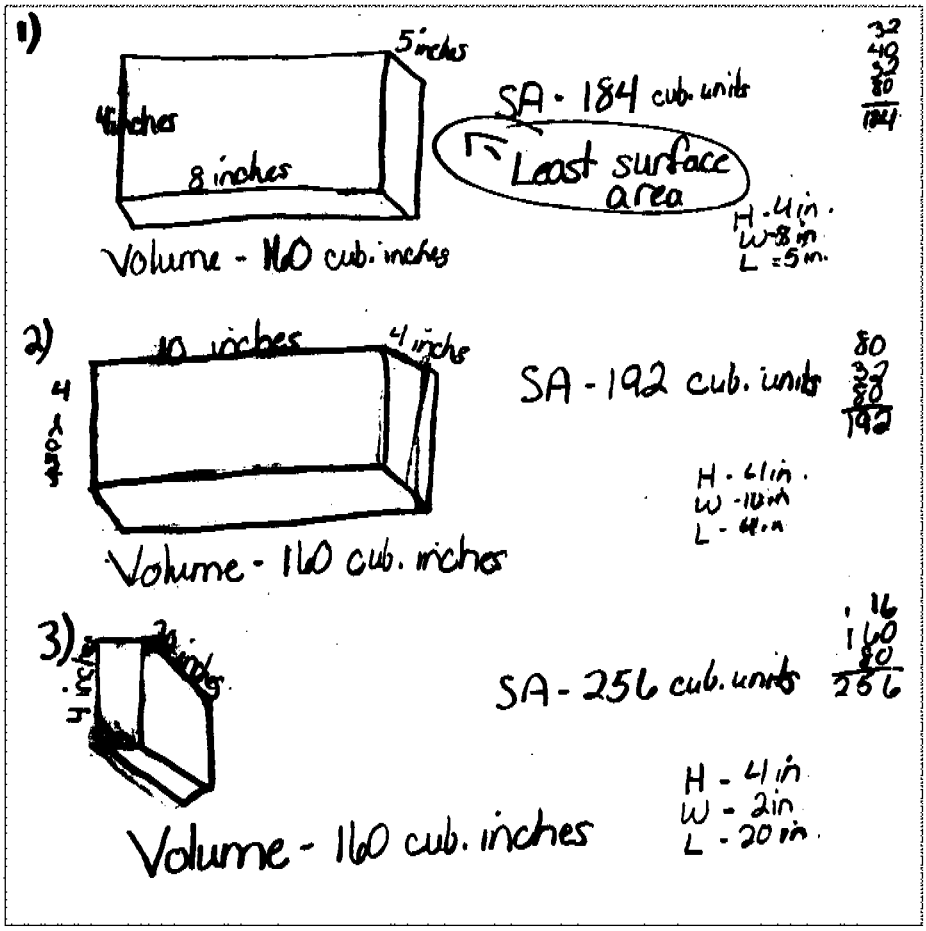

MAP 2006 Operational
Grade 8 Math
Session 1 Item 30
Score : 4 Anchor

Student demonstrates a full understanding of the task by: showing three figures with correct measurements shown for each figure. The student does not show calculations for volume but indicates the volume for each figure is 160. The student calculates surface area correctly for all three figures with some process shown for each figure.

30

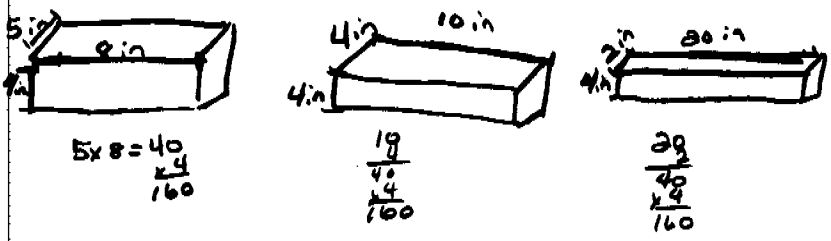

5x8=40
x4
160

19
40
x4
160

20
40
x4
160

The box with the width of 5in and length of 8inches.

8
x5
40
x2
=80

8
x4
32
x2
=64

4
x5
20
x2
=40

40
64
+80
184 in²

MAP 2006 Operational
Grade 8 Math
Session 1 Item 30
Score : 3 Anchor

Student shows a substantial understanding of the task by: showing three figures with correct measurements. The student shows support for volume calculations for each figure. The student calculates the correct surface area for the 4x5x8 figure (184) which is the figure with the least surface area. The student does not show calculations for surface area for the other two figures so a comparison and optimal solution can be made.

30

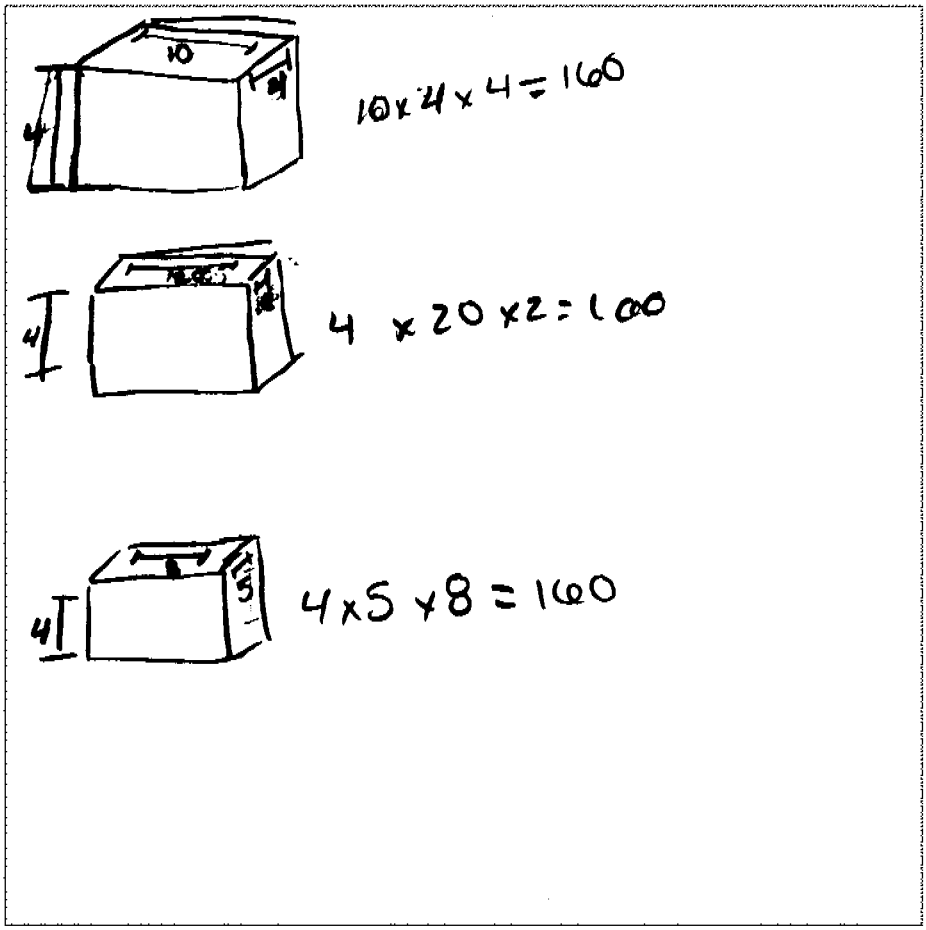

MAP 2006 Operational
Grade 8 Math
Session 1 Item 30
Score : 2 Anchor

Student shows a partial understanding of the task by: showing three figures with correct measurements. The student shows support for volume calculations. The student does not attempt to calculate surface area.

30

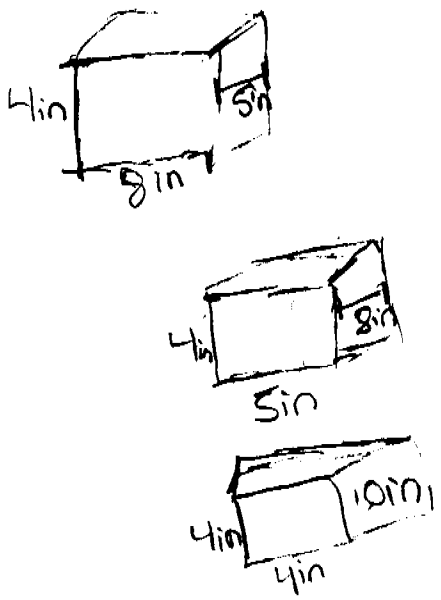

MAP 2006 Operational
Grade 8 Math
Session 1 Item 30
Score : 1 Anchor

Student shows a minimal understanding of the task by: showing two figures with correct measurements, and one duplicate (4x5x8). The student does not attempt to calculate volume or surface area.

30

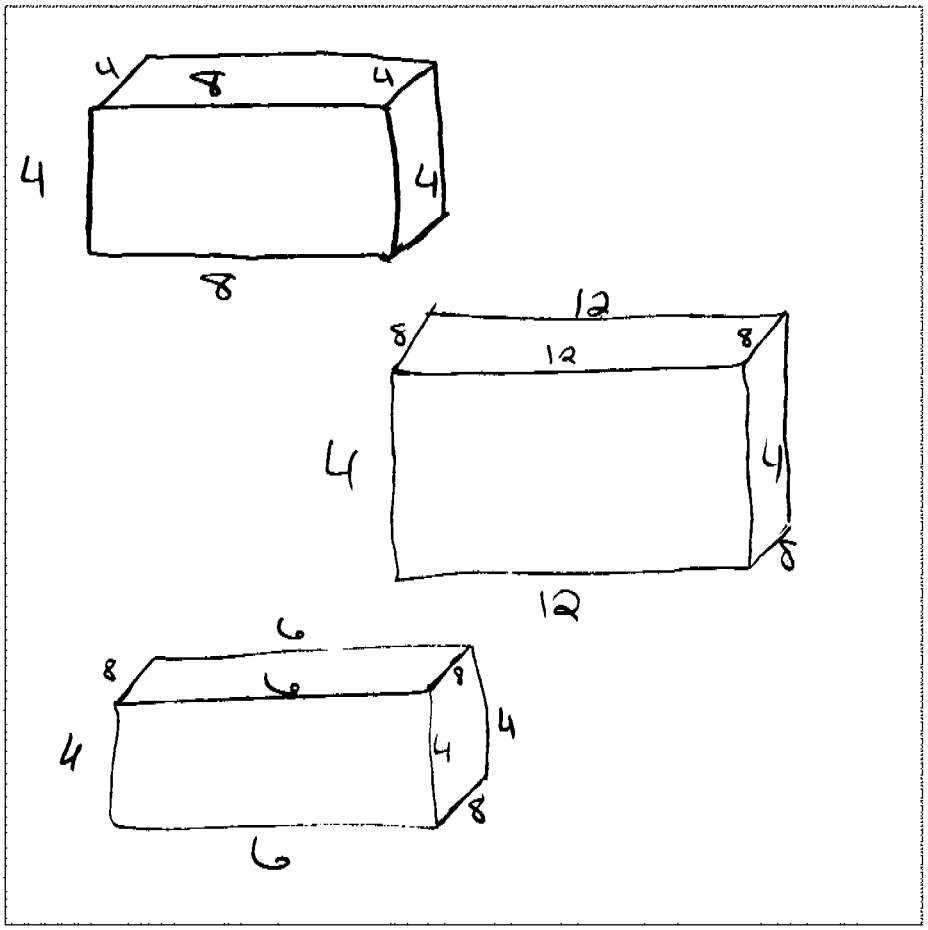

MAP 2006 Operational
Grade 8 Math
Session 1 Item 30
Score : 0 Anchor

Student shows no mathematical understanding of the task by: showing 3 figures with measurements that are incorrect. Student does not attempt to calculate volume or surface area.